SUZHOU 1.0

SI_BUILD

2007.3.26

DATE	CHANGE NO.	REV

	EE	DATE	POWER	DATE
DRAWER				
DESIGN				
CHECK				
RESPONSIBLE				

SIZE = 3 VER :

XXXX-XXXXXX-XX

FILE NAME XXXXXXXXXXXX

F/N

INVENTEC

TITLE *Suzhou1.0*

SIZE	CODE	DOC. NUMBER	REV
A3	CS	*Model_No*	*x01*

SHEET 1 OF 56

TABLE OF CONTENTS

PAGE
5- DC& BATTERY CHARGER
6- SELECT & BATTERY CONN
7- SYSTEM POWER(3V/5V)
8- SYSTEM POWER(+V1.8/+V1.25S)
9- GRAPHIC POWER(+VGFX_CORE)
10- SYSTEM POWER(+VCCP/+V1.5S)
11- CPU POWER(VCC_CORE)
12- DDR TERMINATION VOLTAGE
13- POWER(SLEEP)
14- POWER(SEQUENCE)
15- CLOCK_GENERATOR
16- MEROM-1
17- MEROM-2
18- MEROM-3
19- MEROM-4
20- THERMAL&FAN CONTROLLER
21- Crestline-1
22- Crestline-2
23- Crestline-3-HOST
24- Crestline-4-DDR2
25- Crestline-5-POWER
26- Crestline-6-POWER
27- Crestline-7-POWER

PAGE
28- DDR2-DIMM0
29- DDR2-DIMM1
30- DDR2-DAMPING
31- CRT& SVIDEO CONN
32- LCD CONN
33- ICH8-1
34- ICH8-2
35- ICH8-3
36- ICH8-4
37- ICH8-5
38- HDD CONN
39- ODD CONN
40- USB
41- FINGER PRINT&BlueTooth
42- SPI/HDD PROTECTION
43- KBC
44- INT.KBC/POINT DEVICES
45- CODEC(1981)
46- MIC JACK
47- MDC/Audio AMP
48- LAN INTERFACE
49- LAN RJ45 CONN
50- MINI CARD(WLAN)

PAGE
53- NEW CARD & SD CARD
52- TPM
53- Button&Switch&ILED
54- SCREW
55- LED board
56- Finger Print board

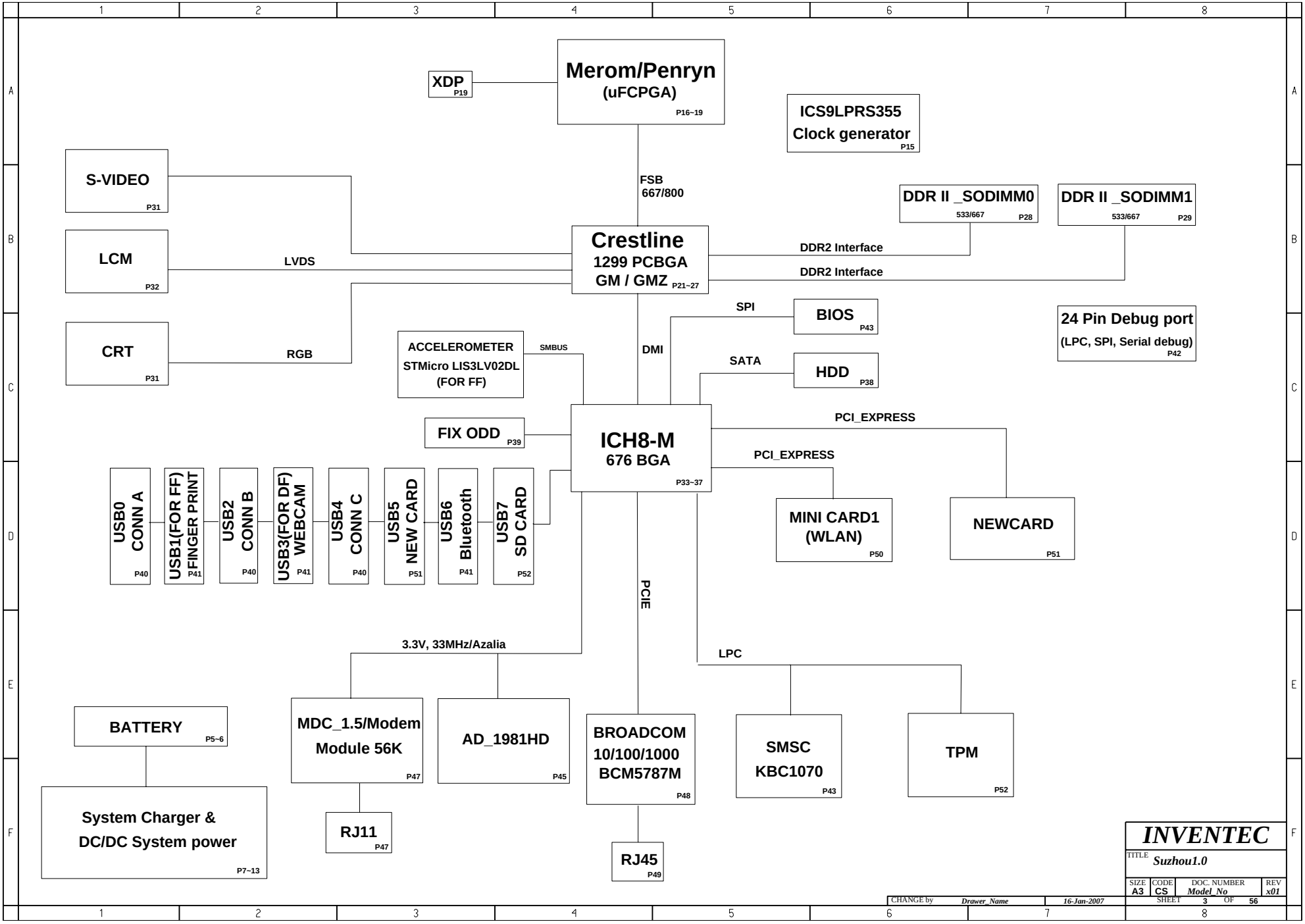
XDP
P19
Merom/Penryn
(uFCPGA)
P16~19
ICS9LPRS355
Clock generator
P15
S-VIDEO
P31
FSB
667/800
DDR II _SODIMM0
533/667
P28
DDR II _SODIMM1
533/667
P29
LCM
P32
LVDS
Crestline
1299 PCBGA
GM / GMZ
P21~27
DDR2 Interface
DDR2 Interface
SPI
BIOS
P43
24 Pin Debug port
(LPC, SPI, Serial debug)
P42
CRT
P31
RGB
ACCELEROMETER
STMicro LIS3LV02DL
(FOR FF)
SMBUS
DMI
SATA
HDD
P38
FIX ODD
P39
ICH8-M
676 BGA
P33~37
PCI_EXPRESS
PCI_EXPRESS
USB0
CONN A
P40
USB1(FOR FF)
FINGER PRINT
P41
USB2
CONN B
P40
USB3(FOR DF)
WEBCAM
P41
USB4
CONN C
P40
USB5
NEW CARD
P51
USB6
Bluetooth
P41
USB7
SD CARD
P52
MINI CARD1
(WLAN)
P50
NEWCARD
P51
PCIE
3.3V, 33MHz/Azalia
LPC
BATTERY
P5~6
MDC_1.5/Modem
Module 56K
P47
AD_1981HD
P45
BROADCOM
10/100/1000
BCM5787M
P48
SMSC
KBC1070
P43
TPM
P52
System Charger &
DC/DC System power
P7~13
RJ11
P47
RJ45
P49
INVENTEC
TITLE
Suzhou1.0
SIZE
A3
CODE
CS
DOC. NUMBER
Model_No
REV
x01
SHEET
3
OF
56
CHANGE by
Drawer_Name
16-Jan-2007

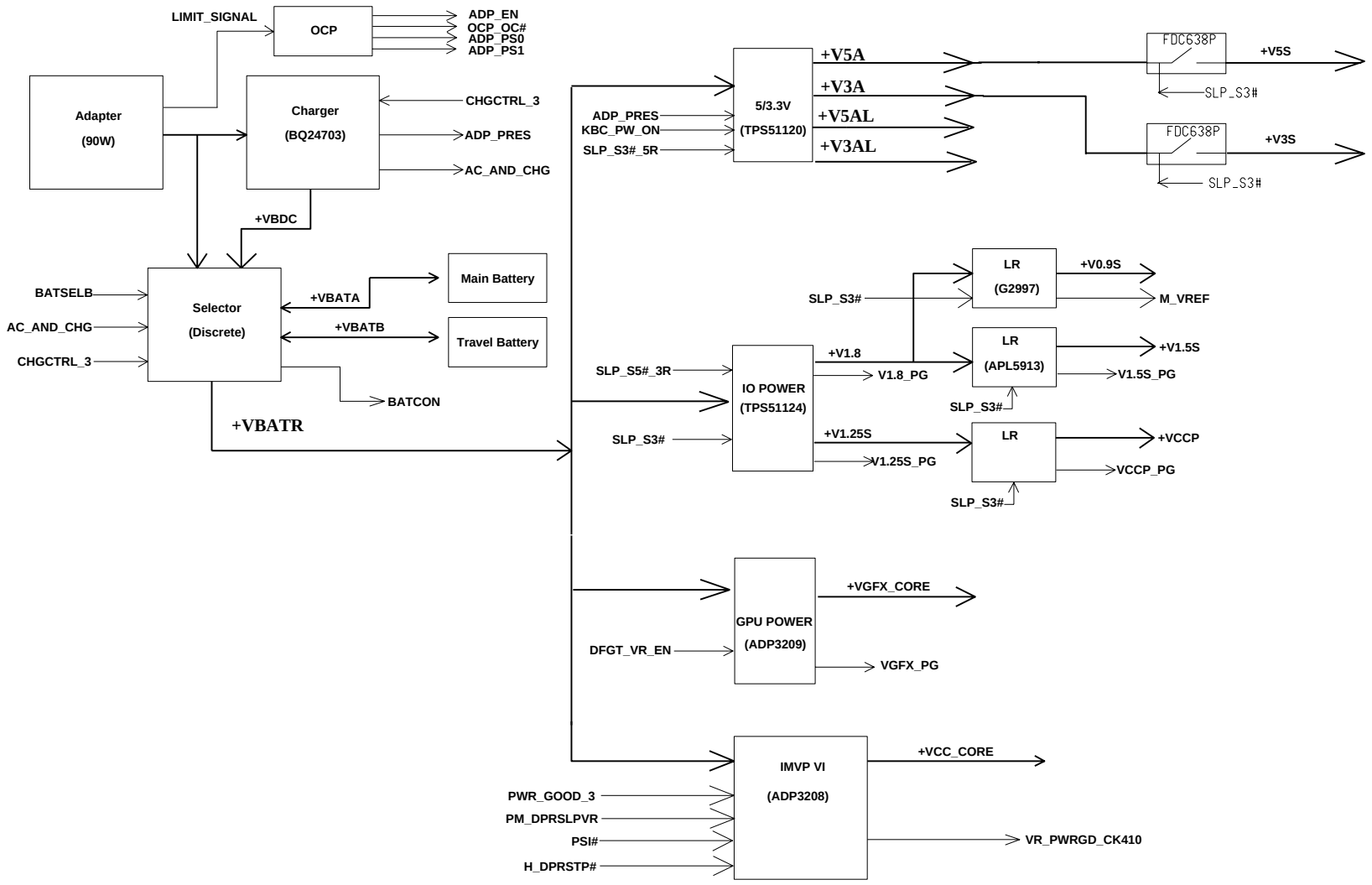

INVENTEC			
TITLE Suzhou1.0			
SIZE A3	CODE CS	DOC. NUMBER Model_No	REV x01
CHANGE by Drawer_Name	4-Jan-2007	SHEET 4 OF 56	

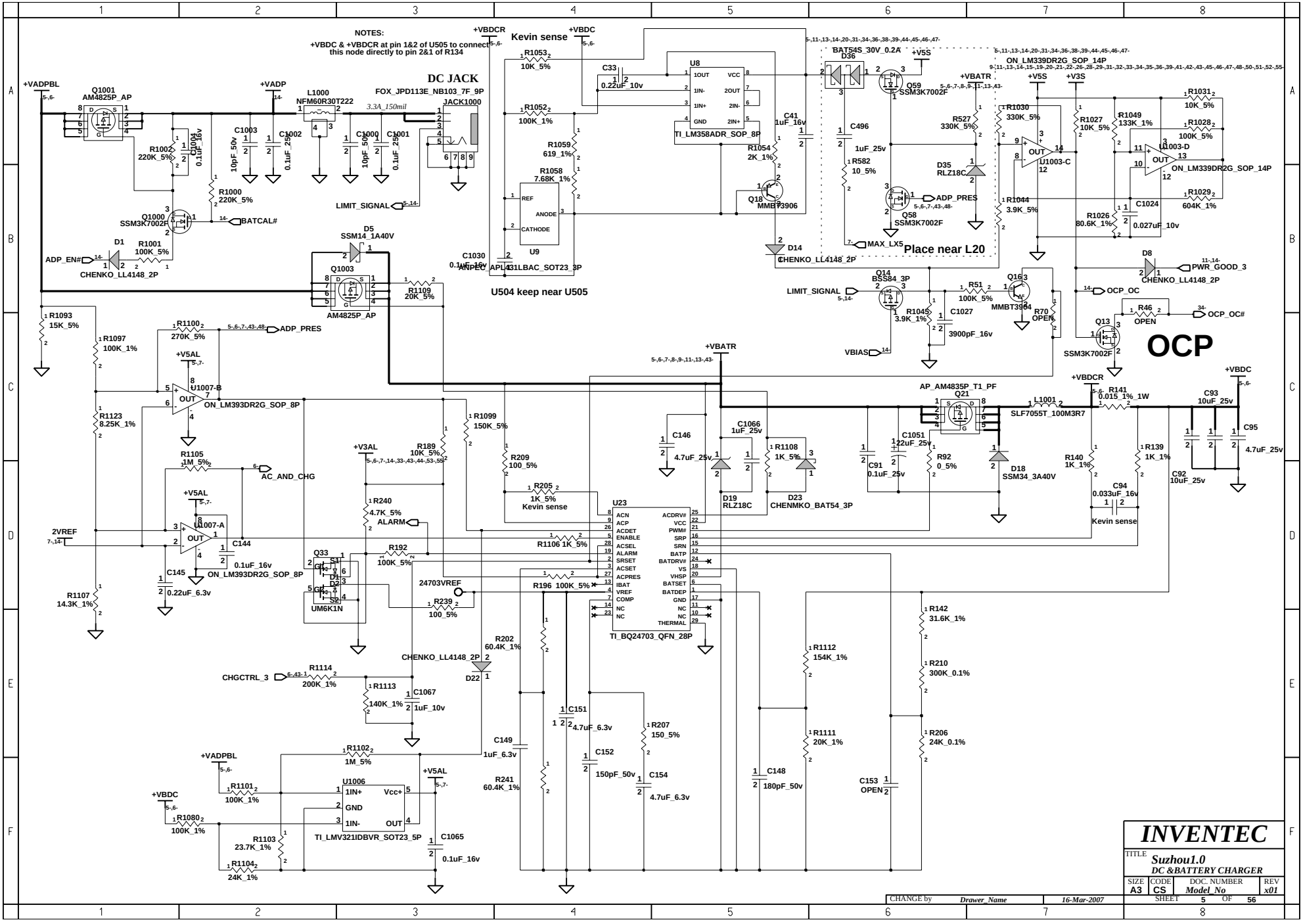
NOTES:
+VBDC & +VBDCR at pin 1&2 of U505 to connect this node directly to pin 2&1 of R134
DC JACK
FOX_JPD113E_NB103_7F_9P
JACK1000
Kevin sense
U504 keep near U505
Place near L20
OCP
TI_LM358ADR_SOP_8P
ON_LM339DR2G_SOP_14P
ON_LM393DR2G_SOP_8P
TI_BQ24703_QFN_28P
TI_LMV321IDBVR_SOT23_5P
ANPEC_APL431LBAC_SOT23_3P
AM4825P_AP
SSM3K7002F
CHENKO_LL4148_2P
SLF7055T_100M3R7
AP_AM4835P_T1_PF
INVENTEC
Suzhou1.0
DC &BATTERY CHARGER
SIZE A3
CODE CS
DOC. NUMBER Model_No
REV x01
SHEET 5 OF 56
CHANGE by Drawer_Name
16-Mar-2007

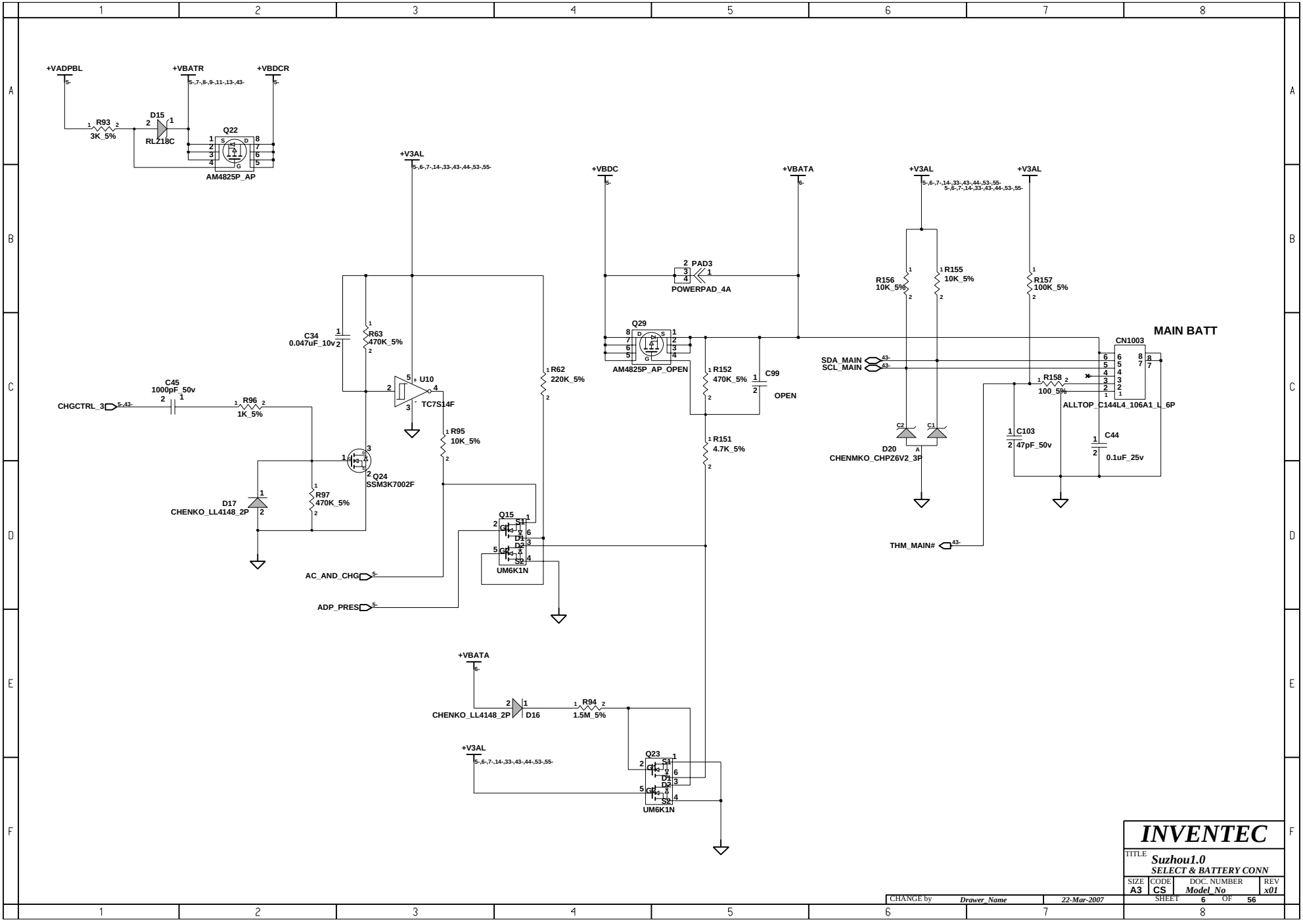
+VADPBL
+VBATR
+VBDCR
R93
3K_5%
D15
RLZ18C
Q22
AM4825P_AP
+V3AL
+VBDC
+VBATA
+V3AL
+V3AL
PAD3
POWERPAD_4A
R156
10K_5%
R155
10K_5%
R157
100K_5%
Q29
AM4825P_AP_OPEN
MAIN BATT
CN1003
SDA_MAIN
SCL_MAIN
C34
0.047uF_10v
R63
470K_5%
U10
TC7S14F
R62
220K_5%
R152
470K_5%
C99
OPEN
R158
100_5%
ALLTOP_C144L4_106A1_L_6P
C45
1000pF_50v
CHGCTRL_3
R96
1K_5%
R95
10K_5%
R151
4.7K_5%
D20
CHENMKO_CHPZ6V2_3P
C103
47pF_50v
C44
0.1uF_25v
Q24
SSM3K7002F
D17
CHENKO_LL4148_2P
R97
470K_5%
Q15
UM6K1N
THM_MAIN#
AC_AND_CHG
ADP_PRES
+VBATA
CHENKO_LL4148_2P
D16
R94
1.5M_5%
+V3AL
Q23
UM6K1N
INVENTEC
TITLE
Suzhou1.0
SELECT & BATTERY CONN
SIZE A3
CODE CS
DOC. NUMBER Model_No
REV x01
SHEET 6 OF 56
CHANGE by Drawer_Name
22-Mar-2007

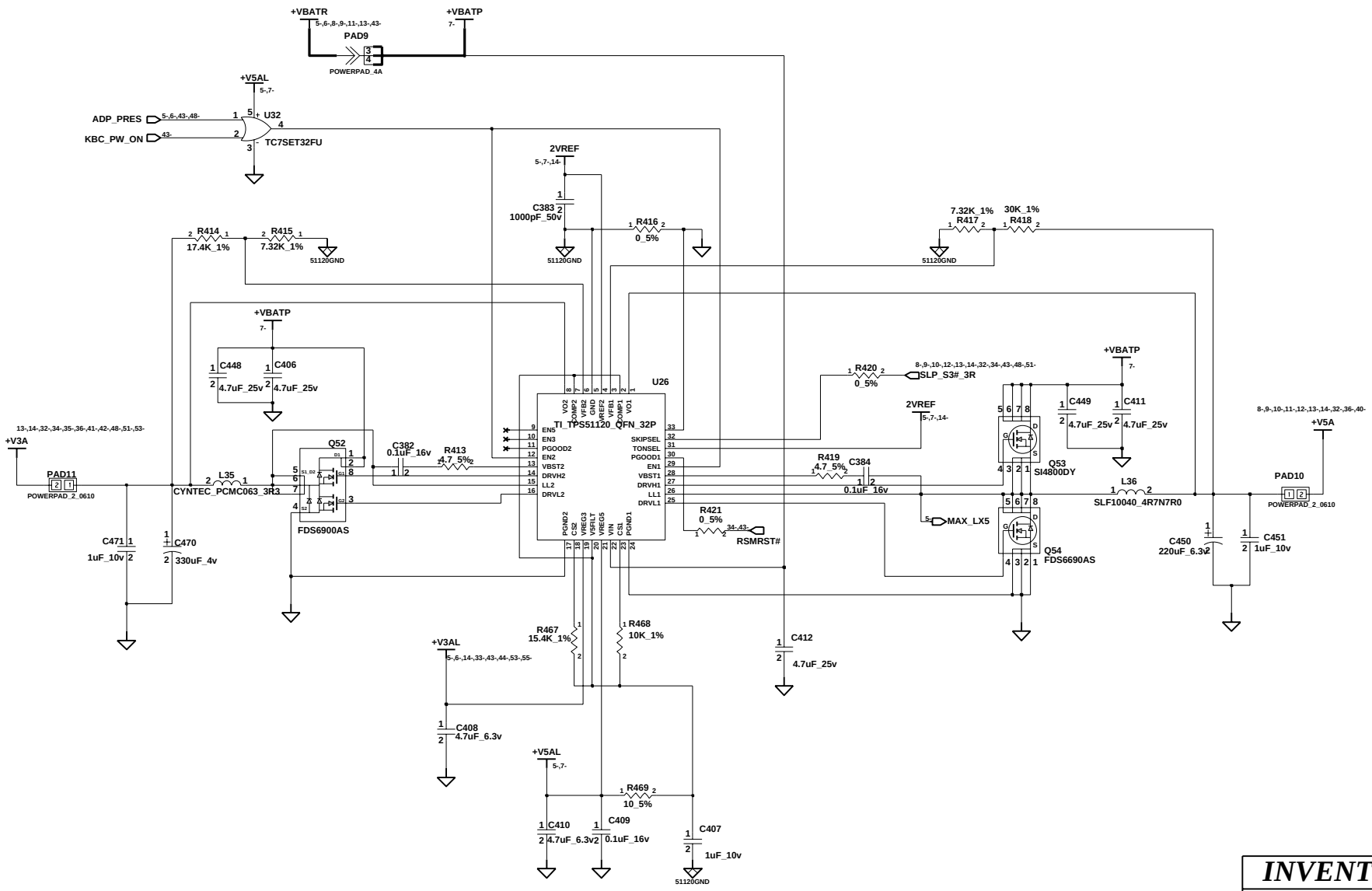

INVENTEC

TITLE **Suzhou1.0**
SYSTEM POWER(3V/5V/12V)

SIZE	CODE	DOC. NUMBER	REV
A3	CS	*Model_No*	*x01*

CHANGE by *Drawer_Name* *12-Feb-2007*

SHEET 7 OF 56

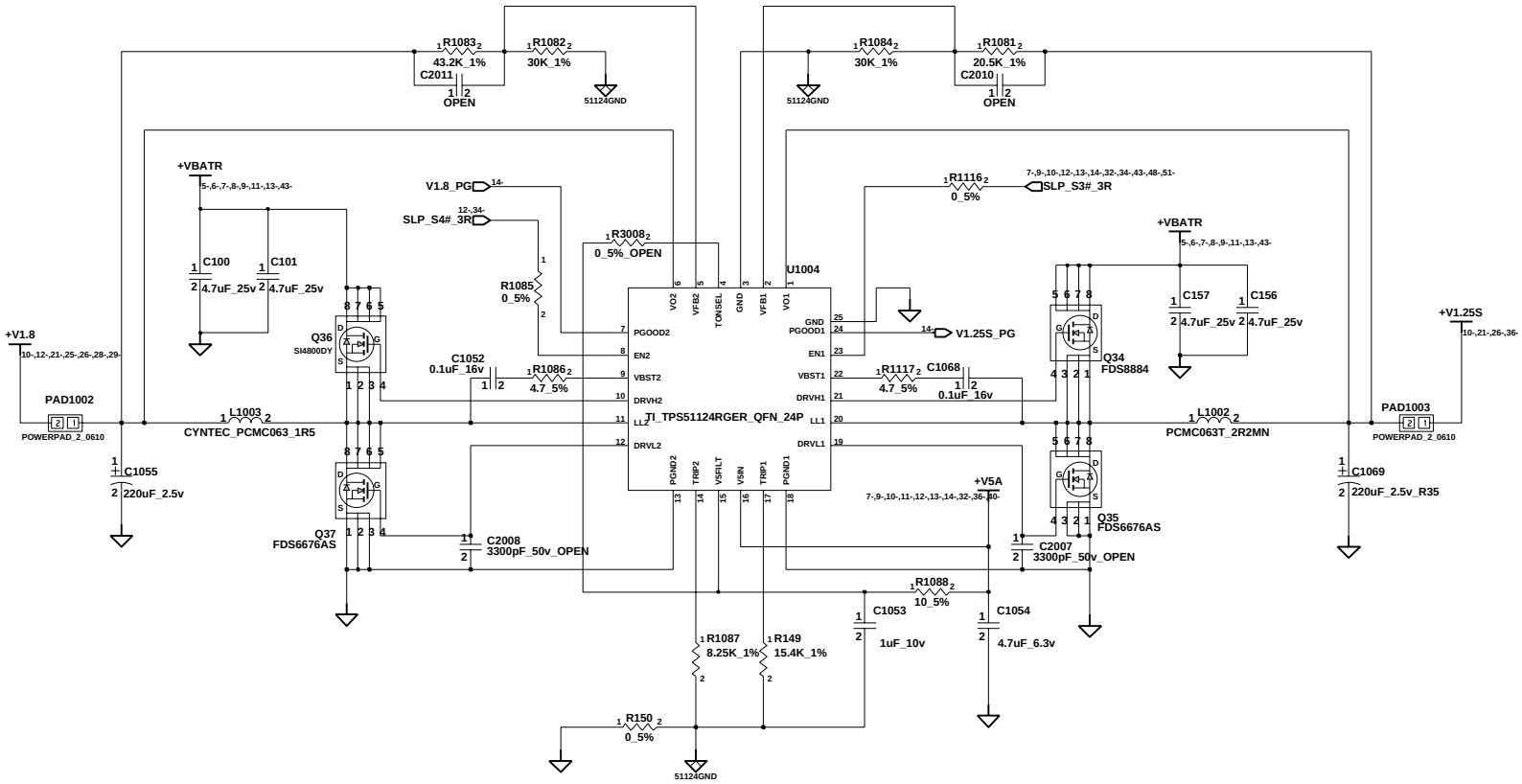

INVENTEC

TITLE
Suzhou1.0
SYSTEM POWER(+V1.8/+V1.25S)

SIZE	CODE	DOC. NUMBER	REV
A3	CS	Model_No	x01

CHANGE by Drawer_Name 24-Mar-2007

SHEET 8 OF 56

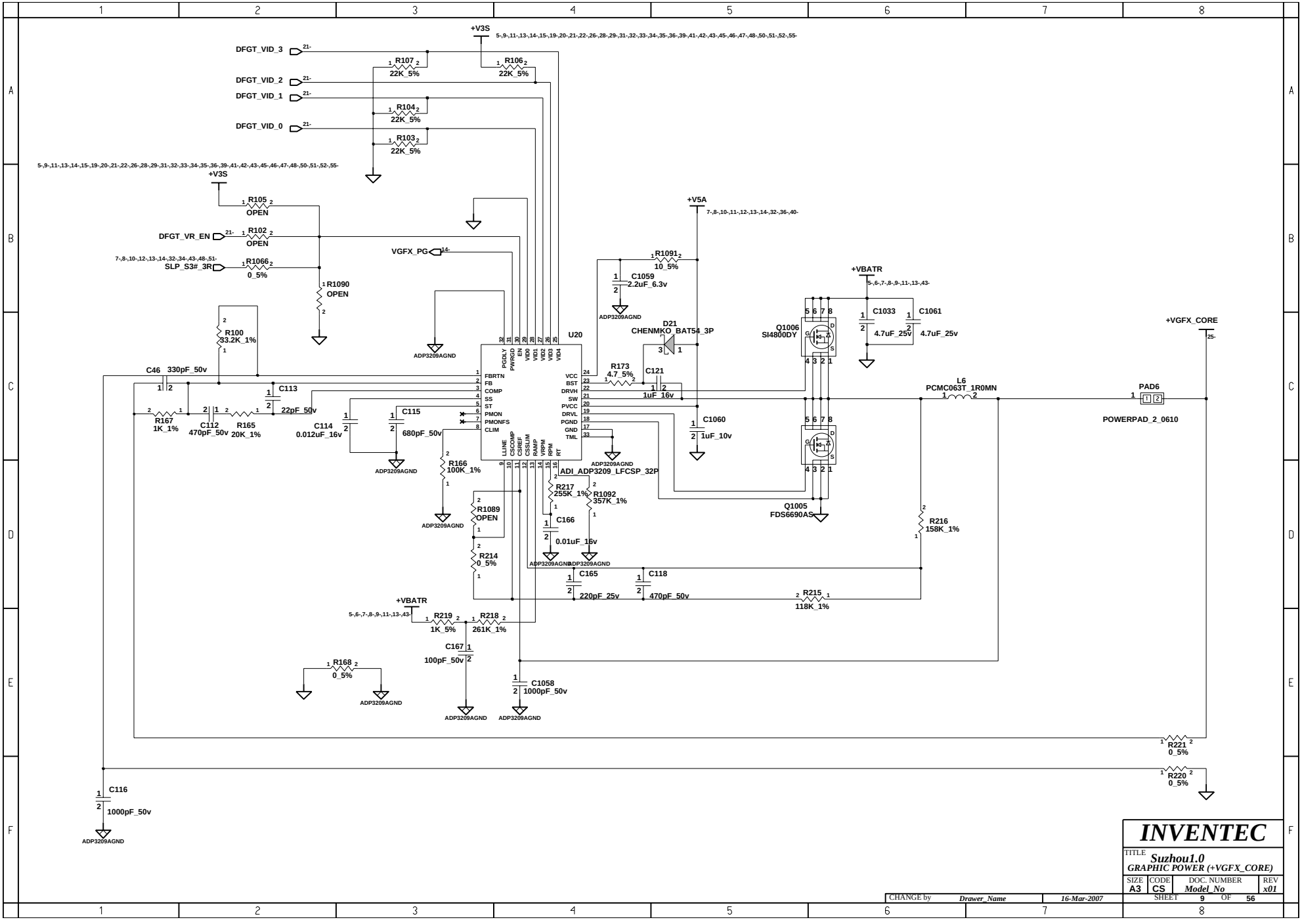

INVENTEC

TITLE
Suzhou1.0
GRAPHIC POWER (+VGFX_CORE)

SIZE	CODE	DOC. NUMBER	REV
A3	CS	Model_No	x01

CHANGE by Drawer_Name 16-Mar-2007

SHEET 9 OF 56

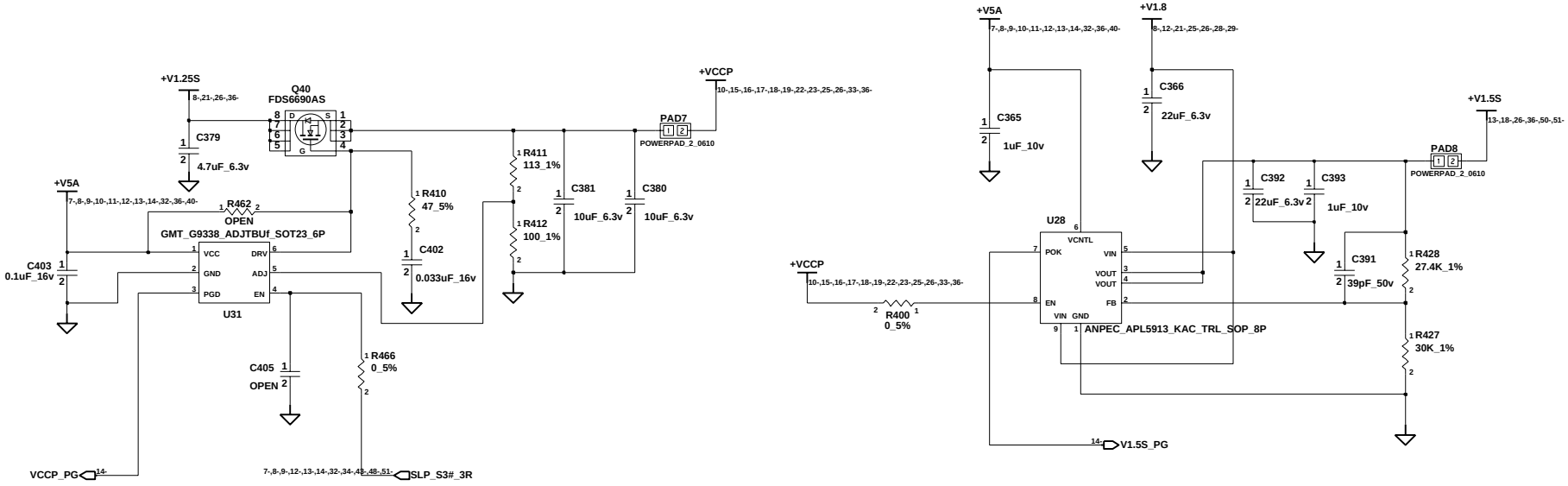

	R579	R576	R578	R577
G9338	0 ohm	OPEN	OPEN	0 ohm
SC339	OPEN	0 ohm	0 ohm	OPEN

INVENTEC

TITLE *Suzhou1.0*

SYSTEM POWER(+VCCP/+V1.5S)

SIZE	CODE	DOC. NUMBER	REV
A3	CS	*Model_No*	*x01*

CHANGE by *Drawer_Name* *13-Feb-2007*

SHEET 10 OF 56

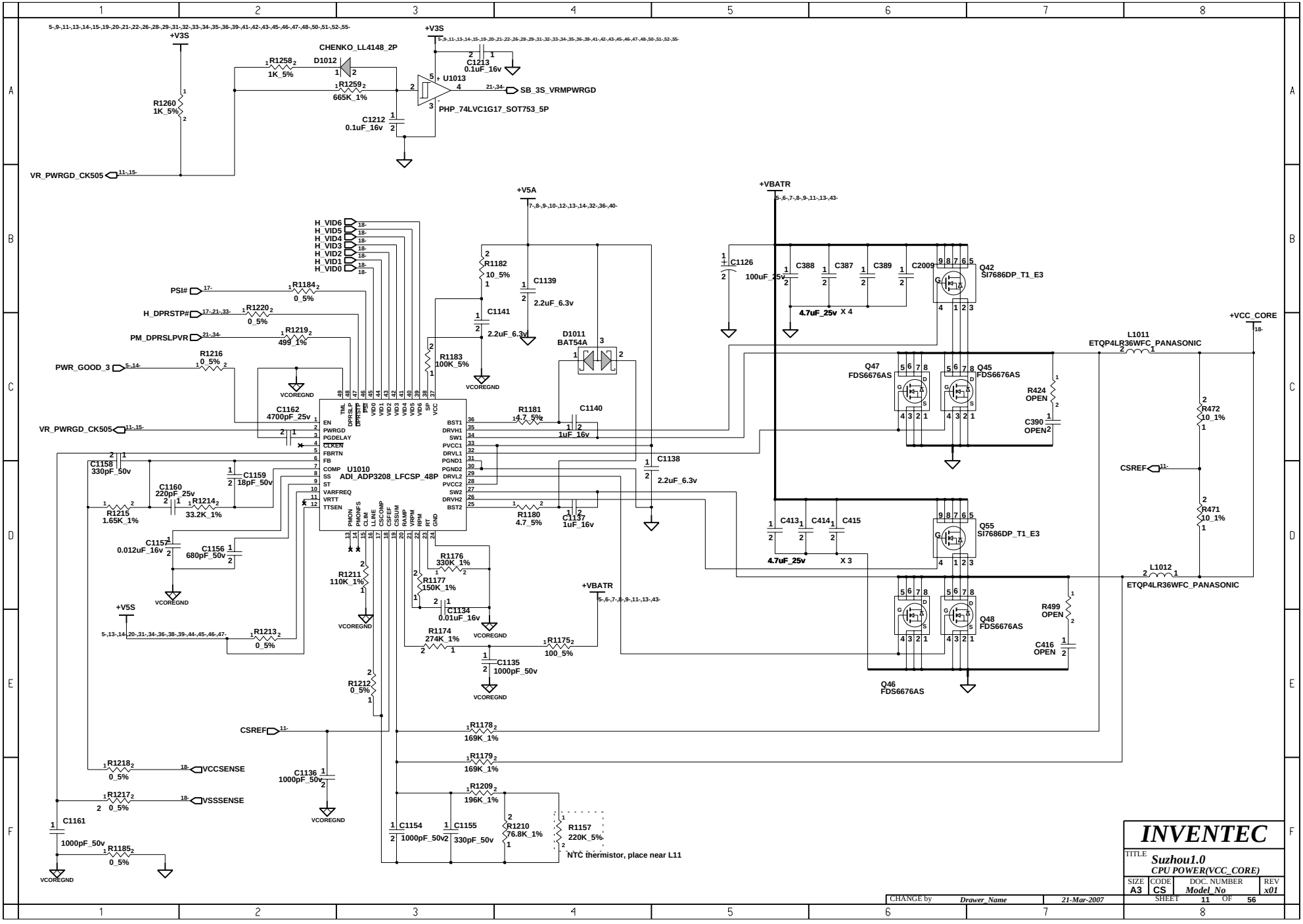
+V3S
CHENKO_LL4148_2P
D1012
R1258 1K_5%
R1259 665K_1%
R1260 1K_5%
C1212 0.1uF_16v
C1213 0.1uF_16v
U1013
PHP_74LVC1G17_SOT753_5P
SB_3S_VRMPWRGD
VR_PWRGD_CK505
+V5A
+VBATR
H_VID6
H_VID5
H_VID4
H_VID3
H_VID2
H_VID1
H_VID0
PSI#
H_DPRSTP#
PM_DPRSLPVR
PWR_GOOD_3
R1184 0_5%
R1220 0_5%
R1219 499_1%
R1216 0_5%
R1182 10_5%
R1183 100K_5%
C1139 2.2uF_6.3v
C1141 2.2uF_6.3v
D1011 BAT54A
C1126 100uF_25v
C388
C387
C389
C2009
Q42 SI7686DP_T1_E3
4.7uF_25v X 4
+VCC_CORE
L1011 ETQP4LR36WFC_PANASONIC
Q47 FDS6676AS
Q45 FDS6676AS
R424 OPEN
C390 OPEN
R472 10_1%
R471 10_1%
CSREF
C1162 4700pF_25v
R1181 4.7_5%
C1140 1uF_16v
C1138 2.2uF_6.3v
U1010 ADI_ADP3208_LFCSP_48P
EN
PWRGD
PGDELAY
CLKEN
FBRTN
FB
COMP
SS
ST
VARFREQ
VRTT
TTSEN
BST1
DRVH1
SW1
PVCC1
DRVL1
PGND1
PGND2
DRVL2
PVCC2
SW2
DRVH2
BST2
C1158 330pF_50v
C1159 18pF_50v
C1160 220pF_25v
R1214 33.2K_1%
R1215 1.65K_1%
C1157 0.012uF_16v
C1156 680pF_50v
R1180 4.7_5%
C1137 1uF_16v
C413
C414
C415
4.7uF_25v X 3
Q55 SI7686DP_T1_E3
L1012 ETQP4LR36WFC_PANASONIC
Q48 FDS6676AS
Q46 FDS6676AS
R499 OPEN
C416 OPEN
R1176 330K_1%
R1177 150K_1%
R1211 110K_1%
C1134 0.01uF_16v
R1174 274K_1%
R1175 100_5%
C1135 1000pF_50v
R1212 0_5%
R1213 0_5%
+V5S
VCOREGND
R1178 169K_1%
R1179 169K_1%
R1209 196K_1%
R1218 0_5%
R1217 0_5%
VCCSENSE
VSSSENSE
C1136 1000pF_50v
C1161 1000pF_50v
R1185 0_5%
C1154 1000pF_50v
C1155 330pF_50v
R1210 76.8K_1%
R1157 220K_5%
NTC thermistor, place near L11
INVENTEC
TITLE
Suzhou1.0
CPU POWER(VCC_CORE)
SIZE A3
CODE CS
DOC. NUMBER Model_No
REV x01
SHEET 11 OF 56
CHANGE by Drawer_Name
21-Mar-2007

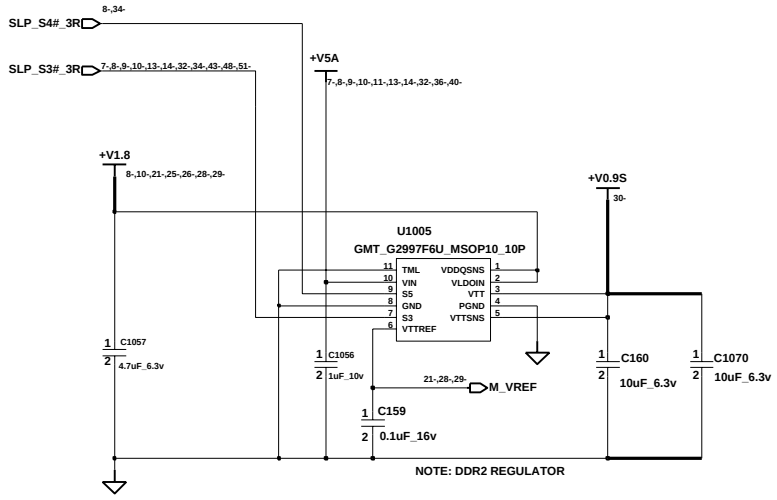

CHANGE by	Drawer_Name	12-Feb-2007	

INVENTEC

TITLE *Suzhou1.0*
DDR TERMINATION VOLTAGE

SIZE	CODE	DOC. NUMBER	REV
A3	CS	*Model_No*	*x01*

SHEET 12 OF 56

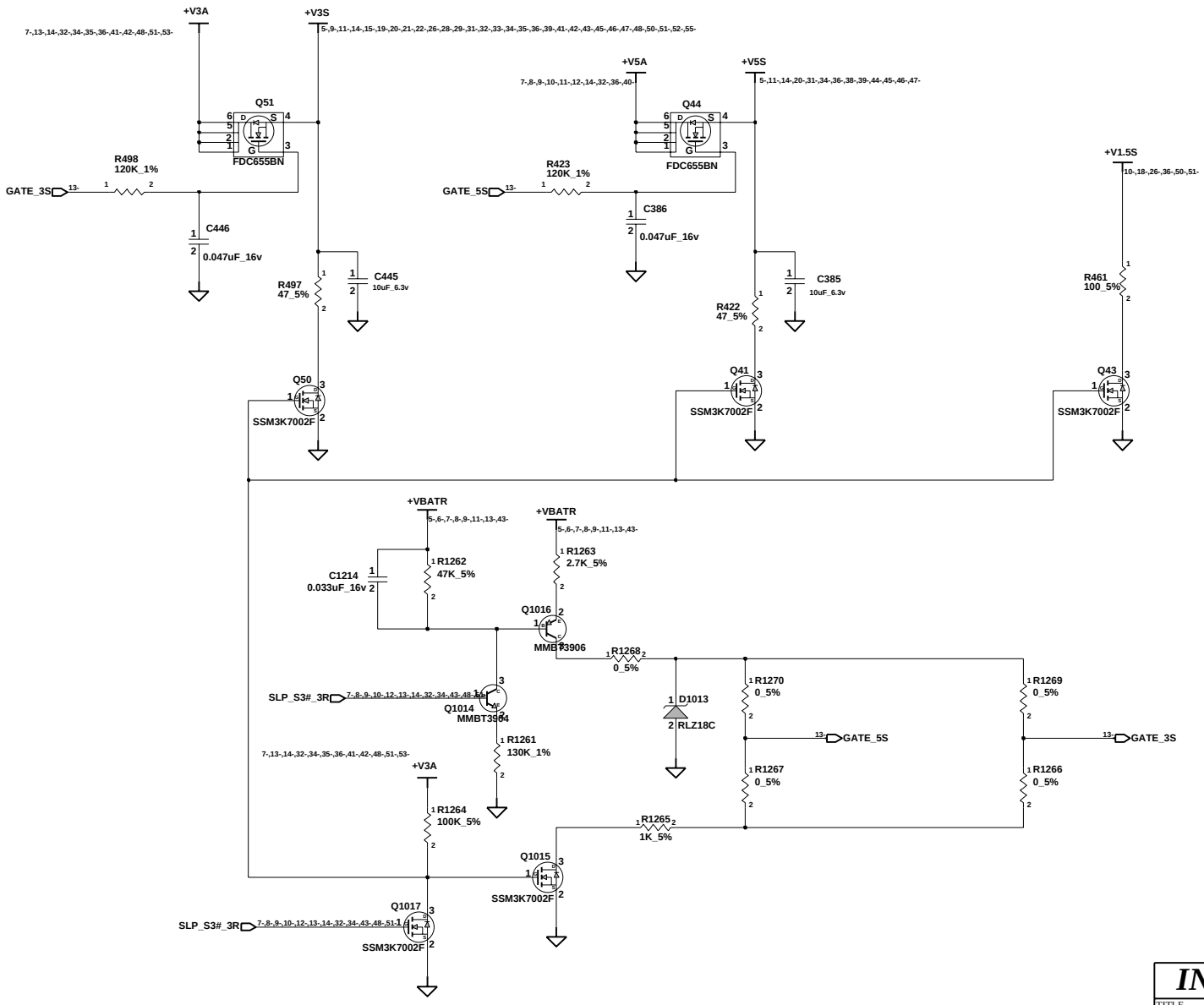

INVENTEC

TITLE *Suzhou1.0*
POWER(SLEEP)

SIZE	CODE	DOC. NUMBER	REV
A3	CS	*Model_No*	*x01*

CHANGE by *Drawer_Name* *21-Mar-2007*

SHEET 13 OF 56

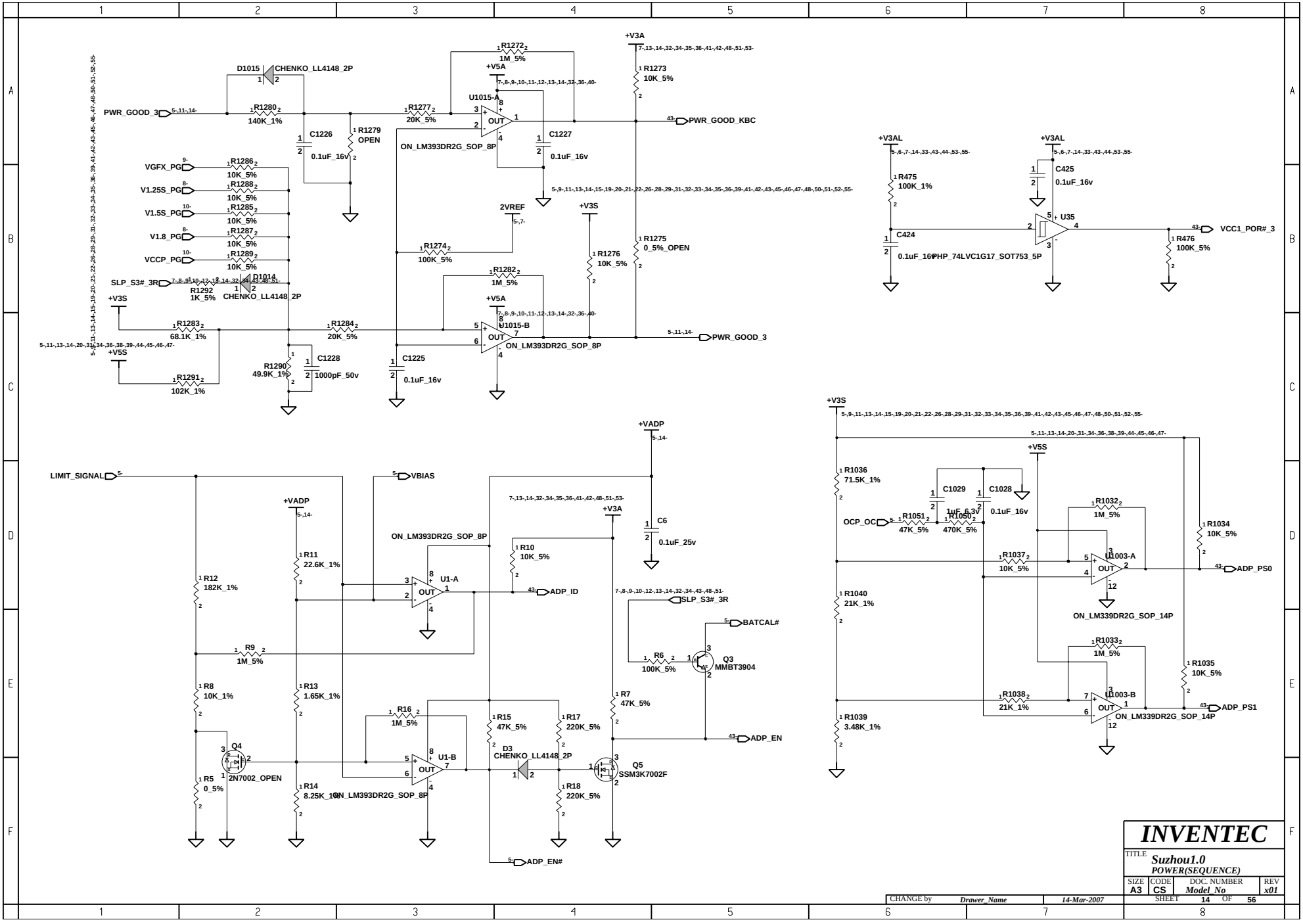
PWR_GOOD_3
D1015
CHENKO_LL4148_2P
R1280
140K_1%
C1226
0.1uF_16v
R1279
OPEN
R1277
20K_5%
R1272
1M_5%
+V5A
U1015-A
ON_LM393DR2G_SOP_8P
C1227
0.1uF_16v
+V3A
R1273
10K_5%
PWR_GOOD_KBC
VGFX_PG
R1286
10K_5%
V1.25S_PG
R1288
10K_5%
V1.5S_PG
R1285
10K_5%
V1.8_PG
R1287
10K_5%
VCCP_PG
R1289
10K_5%
2VREF
+V3S
R1274
100K_5%
R1276
10K_5%
R1275
0_5%_OPEN
SLP_S3#_3R
D1014
R1292
1K_5%
CHENKO_LL4148_2P
R1282
1M_5%
+V5A
U1015-B
ON_LM393DR2G_SOP_8P
PWR_GOOD_3
+V3S
R1283
68.1K_1%
R1284
20K_5%
+V5S
R1290
49.9K_1%
C1228
1000pF_50v
C1225
0.1uF_16v
R1291
102K_1%
+V3AL
R475
100K_1%
C424
0.1uF_16v
C425
0.1uF_16v
U35
PHP_74LVC1G17_SOT753_5P
R476
100K_5%
VCC1_POR#_3
LIMIT_SIGNAL
+VADP
VBIAS
R11
22.6K_1%
R12
182K_1%
ON_LM393DR2G_SOP_8P
U1-A
R10
10K_5%
ADP_ID
+V3A
C6
0.1uF_25v
SLP_S3#_3R
BATCAL#
R9
1M_5%
R6
100K_5%
Q3
MMBT3904
R8
10K_1%
R13
1.65K_1%
R7
47K_5%
R16
1M_5%
R15
47K_5%
R17
220K_5%
ADP_EN
Q4
2N7002_OPEN
U1-B
D3
CHENKO_LL4148_2P
Q5
SSM3K7002F
R5
0_5%
R14
8.25K_1%
ON_LM393DR2G_SOP_8P
R18
220K_5%
ADP_EN#
+V3S
R1036
71.5K_1%
C1029
1uF_6.3v
C1028
0.1uF_16v
OCP_OC
R1051
47K_5%
R1050
470K_5%
R1032
1M_5%
U1003-A
ON_LM339DR2G_SOP_14P
R1034
10K_5%
ADP_PS0
R1037
10K_5%
R1040
21K_1%
R1033
1M_5%
R1035
10K_5%
R1038
21K_1%
U1003-B
ON_LM339DR2G_SOP_14P
ADP_PS1
R1039
3.48K_1%
INVENTEC
TITLE
Suzhou1.0
POWER(SEQUENCE)
SIZE A3
CODE CS
DOC. NUMBER Model_No
REV x01
SHEET 14 OF 56
CHANGE by Drawer_Name
14-Mar-2007

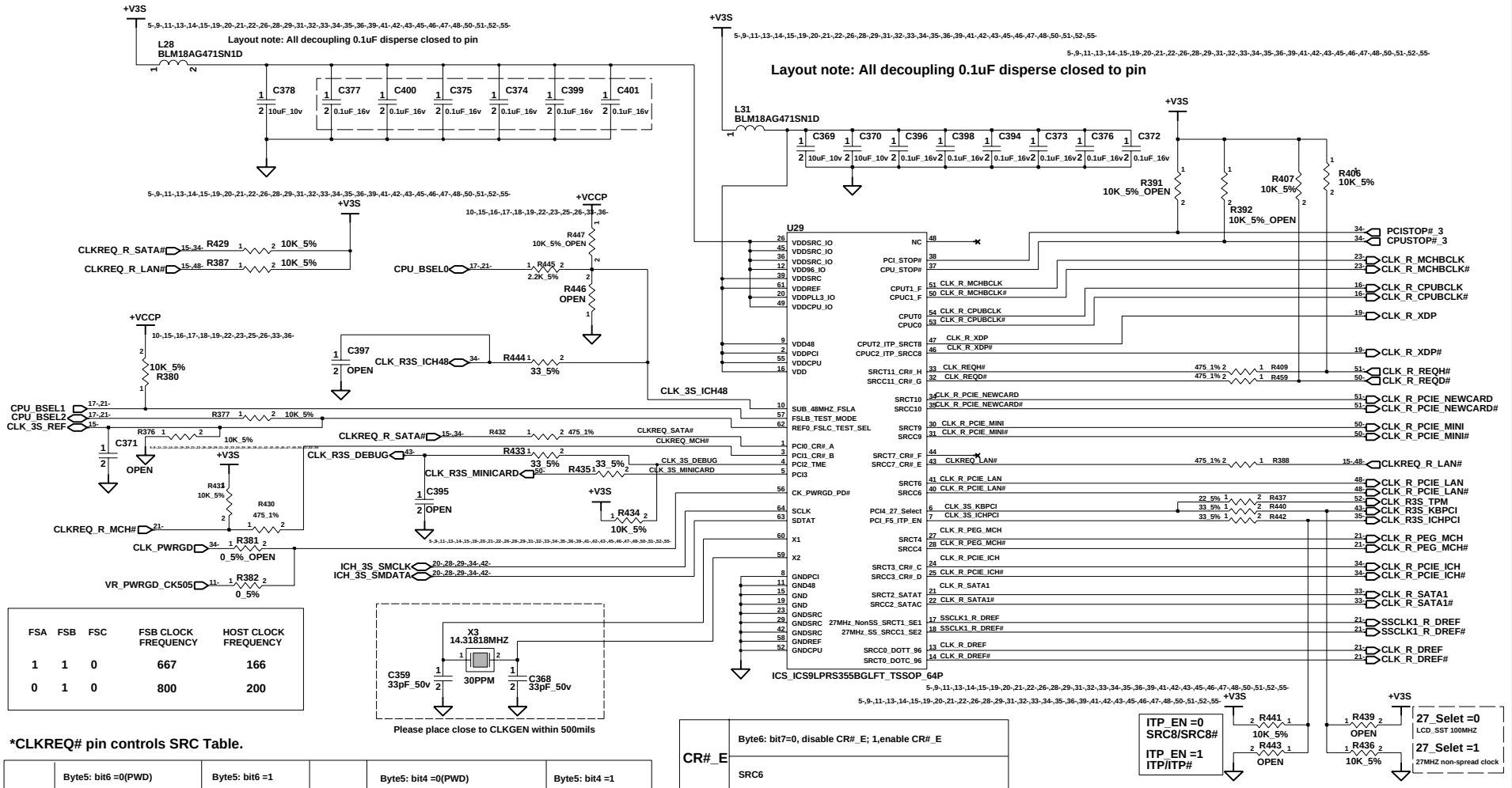

FSA	FSB	FSC	FSB CLOCK FREQUENCY	HOST CLOCK FREQUENCY
1	1	0	667	166
0	1	0	800	200

***CLKREQ# pin controls SRC Table.**

CR#_A	Byte5: bit6 =0(PWD)	Byte5: bit6 =1	CR#_B	Byte5: bit4 =0(PWD)	Byte5: bit4 =1
	SRC0	SRC2		SRC1	SRC4
	Byte5: bit7=0, disable CR#_A; 1,enable CR#_A			Byte5: bit5=0, disable CR#_B; 1,enable CR#_B	

CR#_C	Byte5: bit2 =0(PWD)	Byte5: bit2 =1	CR#_D	Byte5: bit0 =0(PWD)	Byte5: bit0 =1
	SRC0	SRC2		SRC1	SRC4
	Byte5: bit3=0, disable CR#_C; 1,enable CR#_C			Byte5: bit1=0, disable CR#_D; 1,enable CR#_D	

CR#_E	Byte6: bit7=0, disable CR#_E; 1,enable CR#_E
	SRC6
CR#_F	Byte6: bit6=0, disable CR#_F; 1,enable CR#_F
	SRC8
CR#_G	Byte6: bit5=0, disable CR#_G; 1,enable CR#_G
	SRC9
CR#_H	Byte6: bit4=0, disable CR#_H; 1,enable CR#_H
	SRC10

LAYOUT NOTES : THE R684 , R685 , R683 CLOSED TO U21

CHANGE by	Drawer_Name	21-Mar-2007	

INVENTEC

TITLE *Suzhou1.0* *CLOCK_GENERATOR*

SIZE	CODE	DOC. NUMBER	REV
A3	CS	Model_No	x01

SHEET 15 OF 56

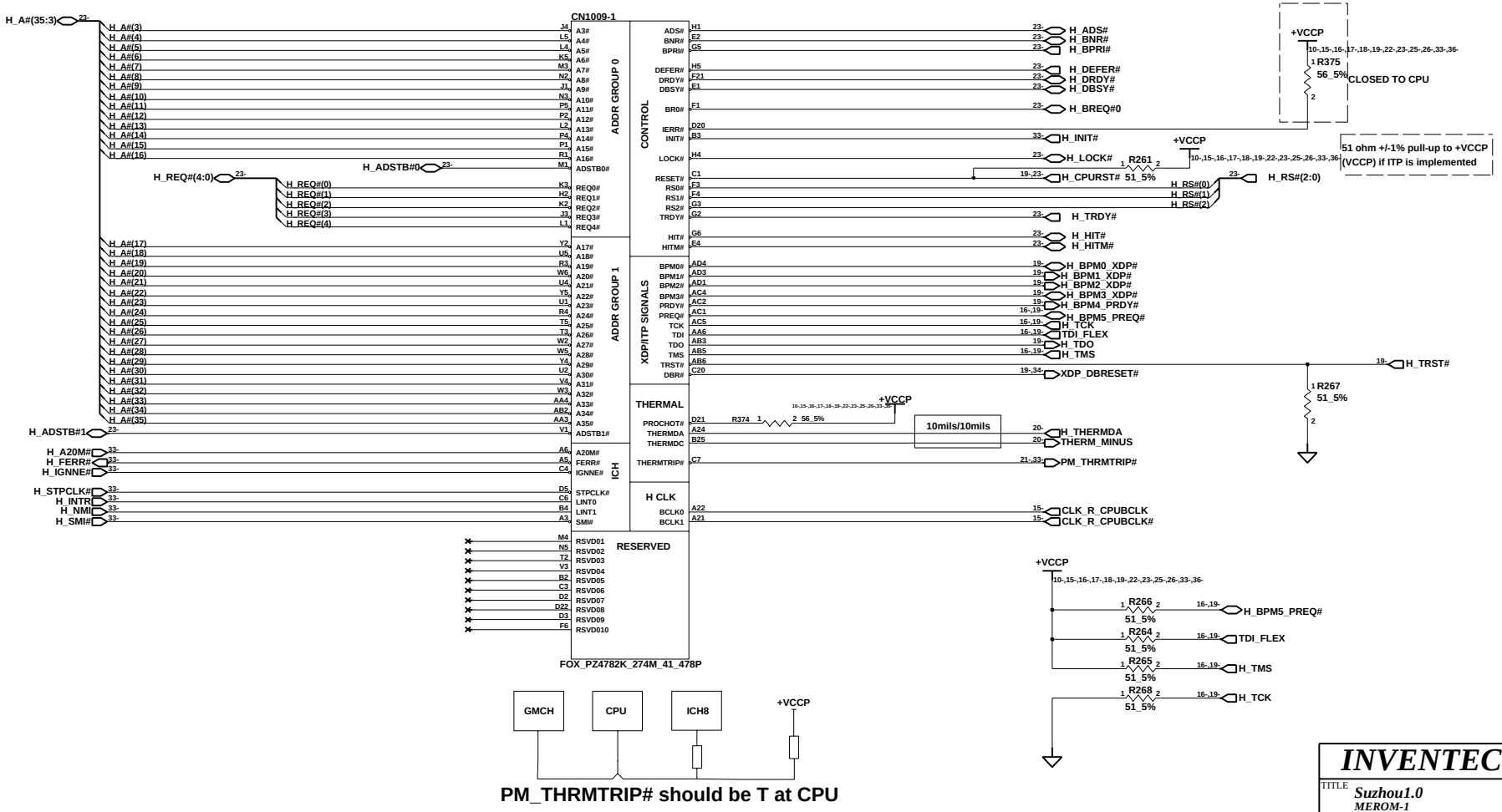

INVENTEC

TITLE Suzhou1.0
MEROM-1

SIZE	CODE	DOC. NUMBER	REV
A3	CS	Model_No	x01

CHANGE by Drawer_Name 8-Feb-2007

SHEET 16 OF 56

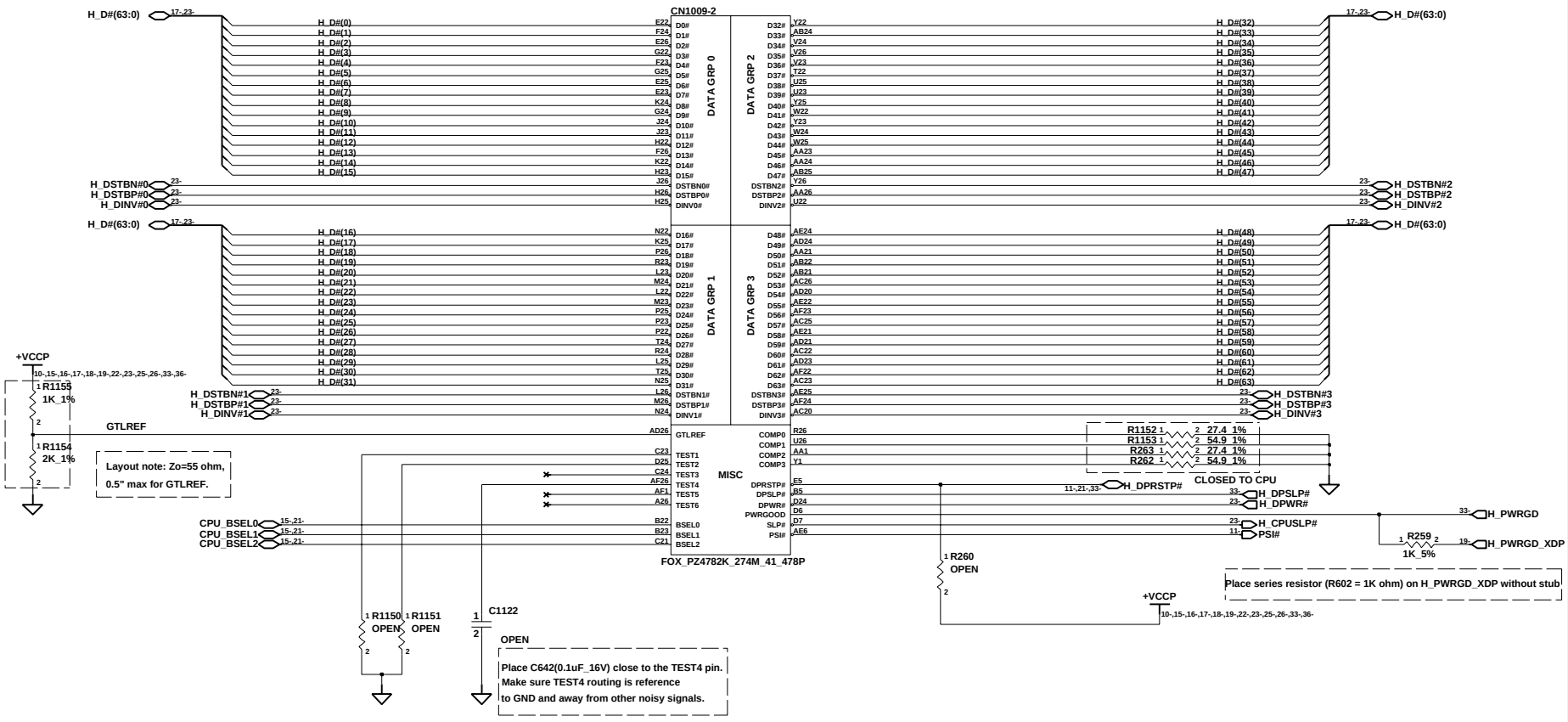

INVENTEC			
TITLE Suzhou1.0 MEROM-2			
SIZE A3	CODE CS	DOC. NUMBER Model_No	REV x01
CHANGE by Drawer_Name	17-Jan-2007	SHEET 17 OF 56	

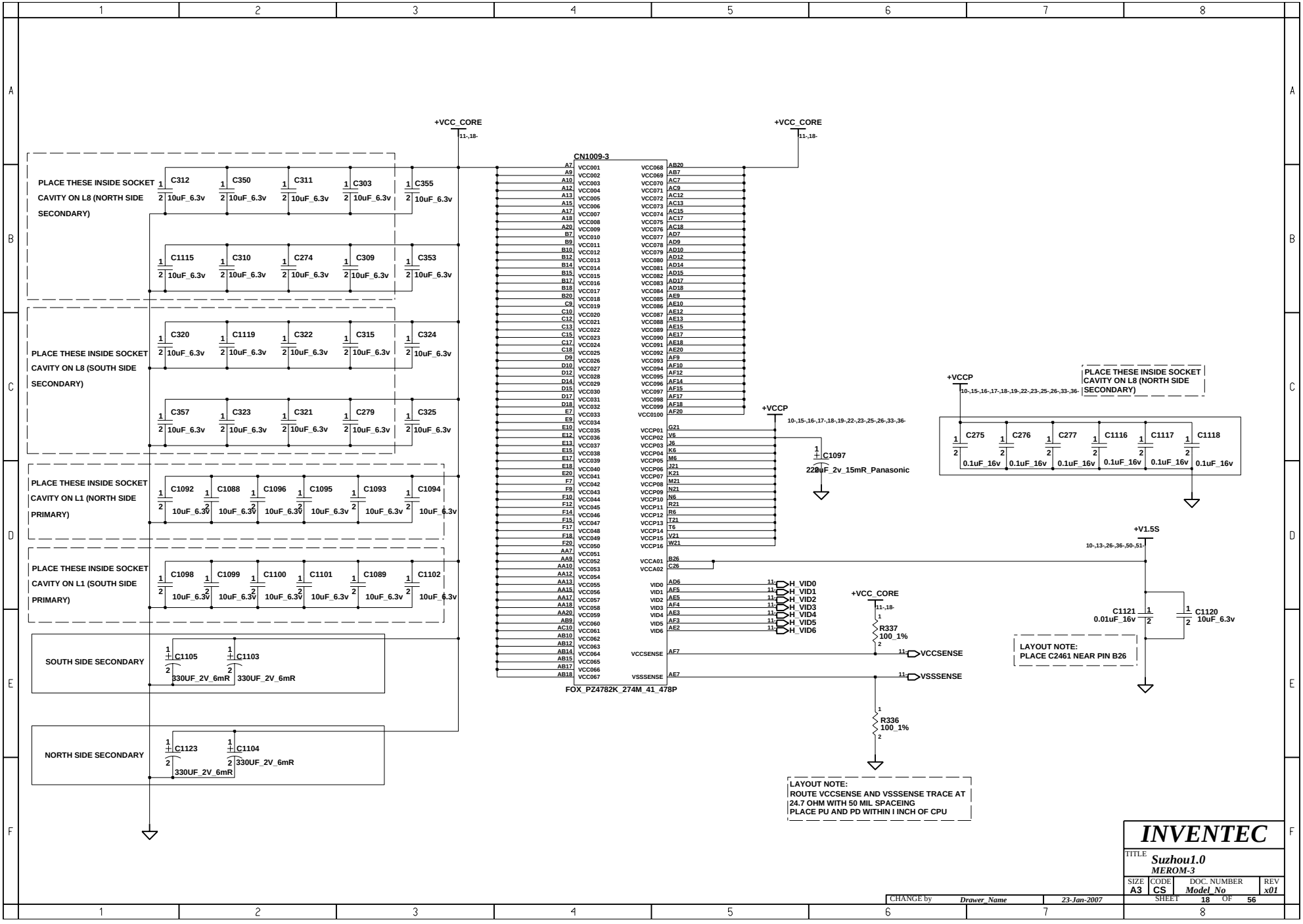
+VCC_CORE
11-,18-
CN1009-3
PLACE THESE INSIDE SOCKET CAVITY ON L8 (NORTH SIDE SECONDARY)
C312 10uF_6.3v
C350 10uF_6.3v
C311 10uF_6.3v
C303 10uF_6.3v
C355 10uF_6.3v
C1115 10uF_6.3v
C310 10uF_6.3v
C274 10uF_6.3v
C309 10uF_6.3v
C353 10uF_6.3v
PLACE THESE INSIDE SOCKET CAVITY ON L8 (SOUTH SIDE SECONDARY)
C320 10uF_6.3v
C1119 10uF_6.3v
C322 10uF_6.3v
C315 10uF_6.3v
C324 10uF_6.3v
C357 10uF_6.3v
C323 10uF_6.3v
C321 10uF_6.3v
C279 10uF_6.3v
C325 10uF_6.3v
PLACE THESE INSIDE SOCKET CAVITY ON L1 (NORTH SIDE PRIMARY)
C1092 10uF_6.3v
C1088 10uF_6.3v
C1096 10uF_6.3v
C1095 10uF_6.3v
C1093 10uF_6.3v
C1094 10uF_6.3v
PLACE THESE INSIDE SOCKET CAVITY ON L1 (SOUTH SIDE PRIMARY)
C1098 10uF_6.3v
C1099 10uF_6.3v
C1100 10uF_6.3v
C1101 10uF_6.3v
C1089 10uF_6.3v
C1102 10uF_6.3v
SOUTH SIDE SECONDARY
C1105 330UF_2V_6mR
C1103 330UF_2V_6mR
NORTH SIDE SECONDARY
C1123 330UF_2V_6mR
C1104 330UF_2V_6mR
FOX_PZ4782K_274M_41_478P
+VCCP
10-,15-,16-,17-,18-,19-,22-,23-,25-,26-,33-,36-
C1097 220uF_2v_15mR_Panasonic
PLACE THESE INSIDE SOCKET CAVITY ON L8 (NORTH SIDE SECONDARY)
C275 0.1uF_16v
C276 0.1uF_16v
C277 0.1uF_16v
C1116 0.1uF_16v
C1117 0.1uF_16v
C1118 0.1uF_16v
+V1.5S
10-,13-,26-,36-,50-,51-
C1121 0.01uF_16v
C1120 10uF_6.3v
LAYOUT NOTE:
PLACE C2461 NEAR PIN B26
H_VID0
H_VID1
H_VID2
H_VID3
H_VID4
H_VID5
H_VID6
R337 100_1%
VCCSENSE
VSSSENSE
R336 100_1%
LAYOUT NOTE:
ROUTE VCCSENSE AND VSSSENSE TRACE AT 24.7 OHM WITH 50 MIL SPACEING
PLACE PU AND PD WITHIN I INCH OF CPU
INVENTEC
TITLE Suzhou1.0
MEROM-3
SIZE A3
CODE CS
DOC. NUMBER Model_No
REV x01
CHANGE by Drawer_Name
23-Jan-2007
SHEET 18 OF 56

XDP CONNECTOR

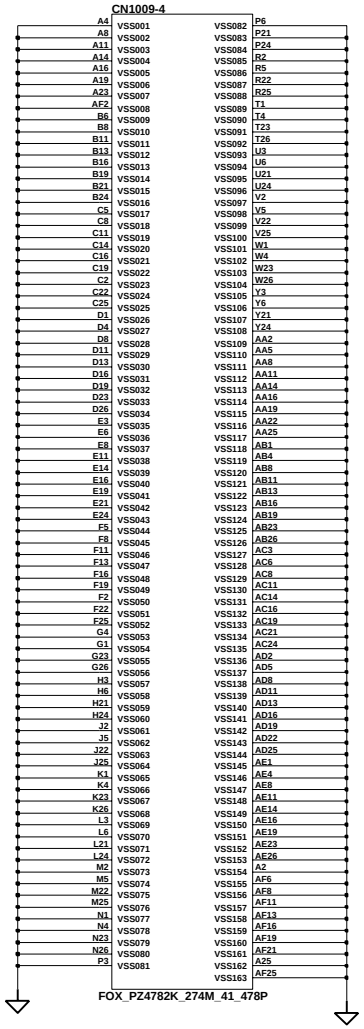

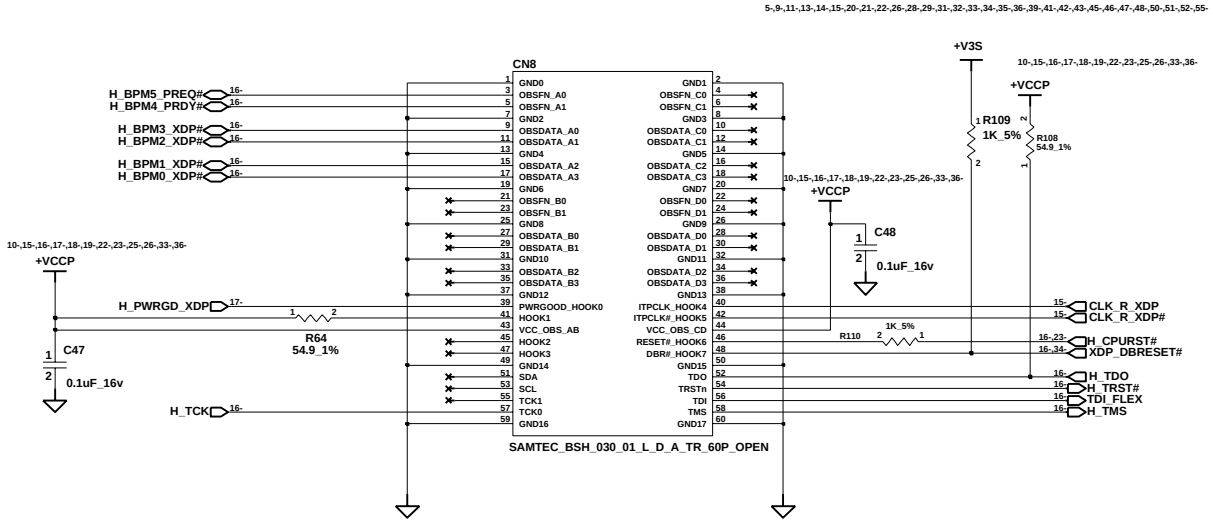

INVENTEC			
TITLE Suzhou1.0 MEROM-4			
SIZE A3	CODE CS	DOC. NUMBER Model_No	REV x01
CHANGE by Drawer_Name	26-Mar-2007	SHEET 19 OF 56	

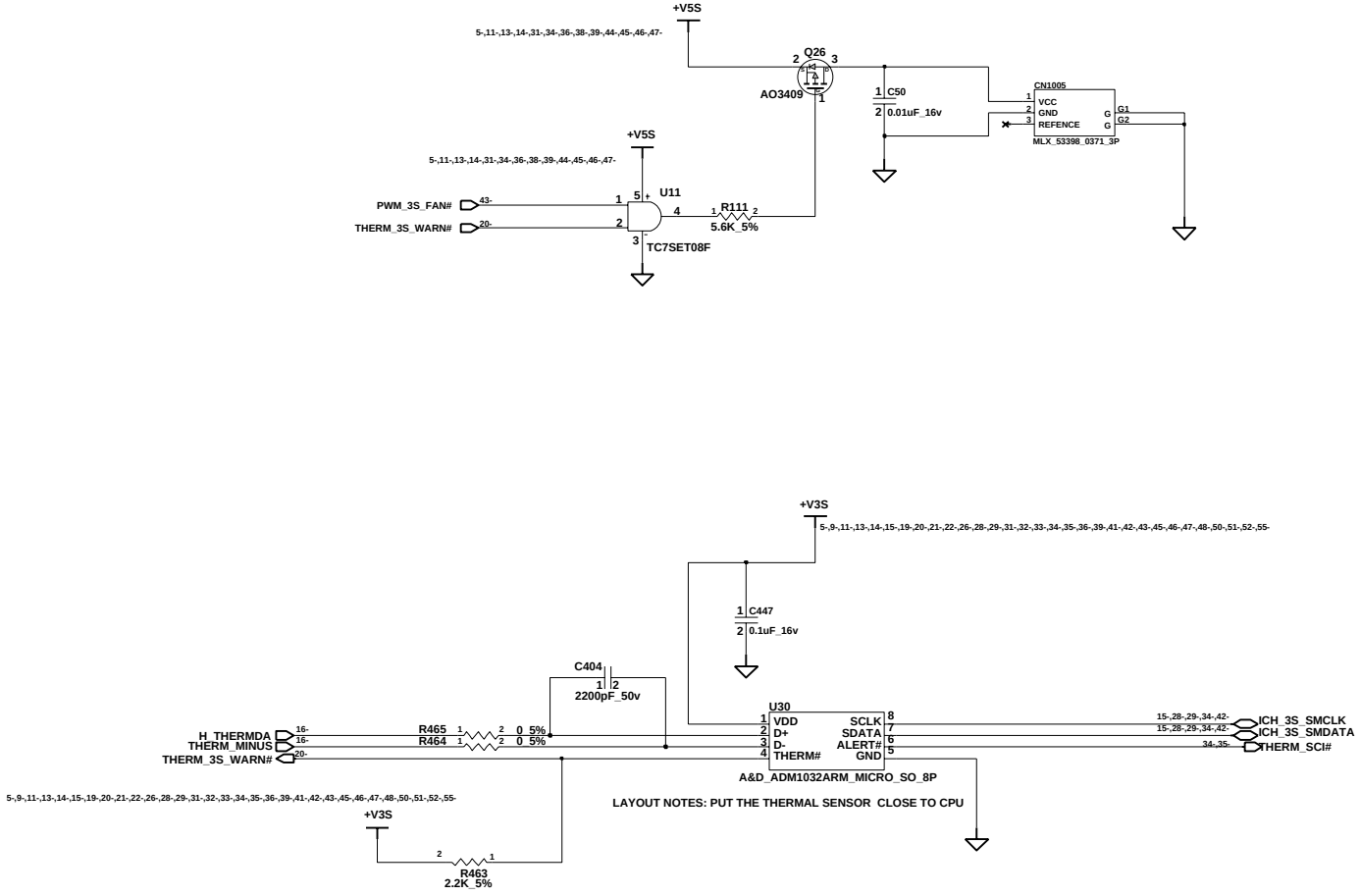

INVENTEC

TITLE Suzhou1.0
THERMAL&FAN CONTROLLER

SIZE	CODE	DOC. NUMBER	REV
A3	CS	Model_No	x01

CHANGE by Drawer_Name 2-Feb-2007

SHEET 20 OF 56

MCH_CFG(5)	LOW=DMIx2 HIGH=DMIx4

MCH_CFG(7) (CPU Strap)	LOW=RSVD HIGH=Mobile CPU

MCH_CFG(9) PCIE Graphics Lane	LOW=Reverse Lane HIGH=Normal operation

NOTE : USE 4K-OHM RESISTOR WHEN INSTALLING PULL-UP/PULL-DOWN RESISTOR ON ANY MCH-CFG CONNECTION/PINS.

MCH_CFG(13:12) XOR/ALLZ	00=PARTIAL CLOCK GATING DISABLE 01=XOR MODE ENABLE 10=ALL-Z MODE ENABLE 11=NORMAL OPERATION

MCH_CFG(16) (FSB Dynamic ODT)	LOW=Dynamic ODT Disable HIGH=Dynamic ODT Enable

MCH_CFG(11) PSB 4X CLK ENABLE	LOW=CALISTOGA HIGH=RESERVED

NOTE: CFG[2:0] STRP : 001b : 533 MT/S
011b : 667 MT/S

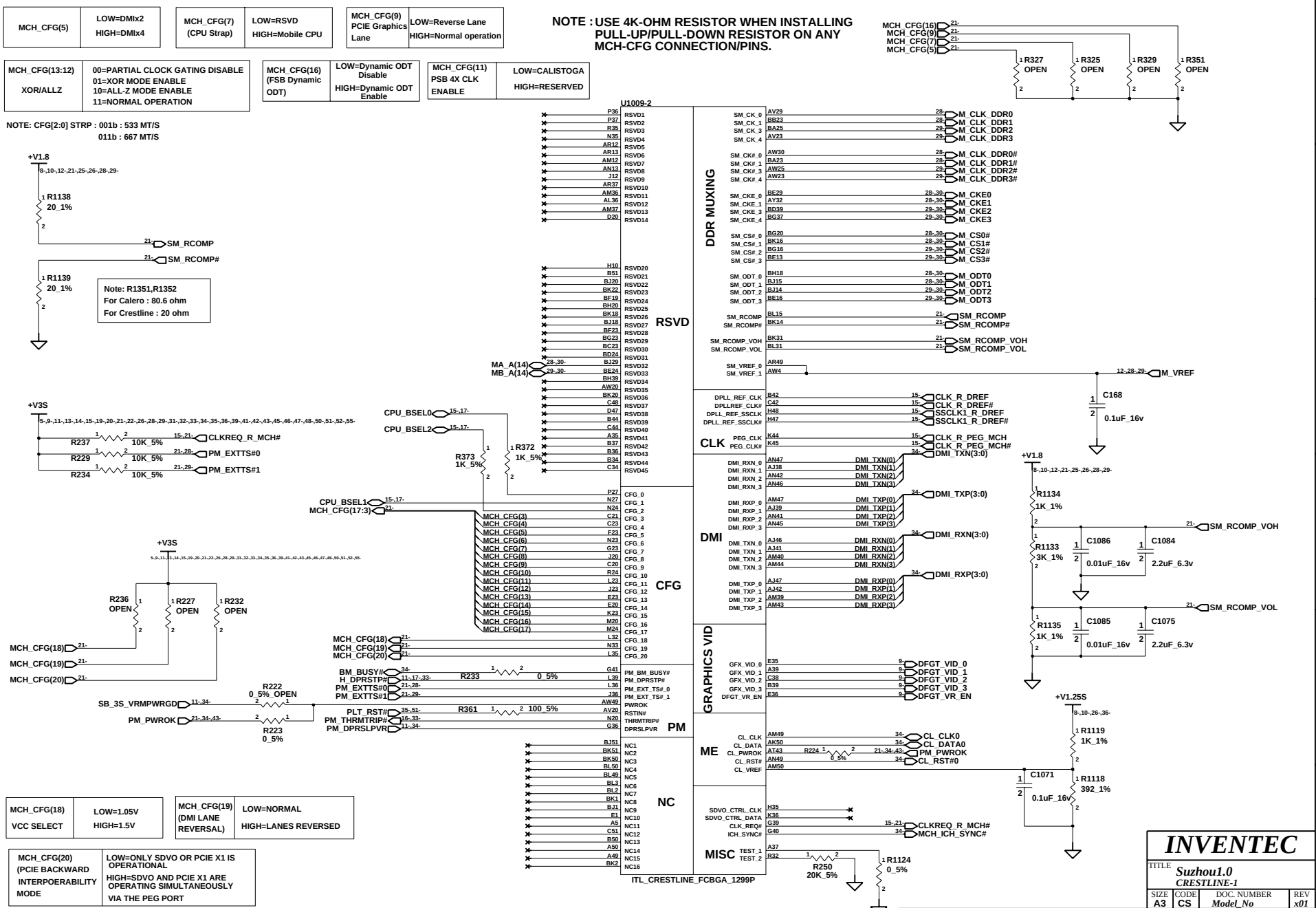

MCH_CFG(18) VCC SELECT	LOW=1.05V HIGH=1.5V

MCH_CFG(19) (DMI LANE REVERSAL)	LOW=NORMAL HIGH=LANES REVERSED

MCH_CFG(20) (PCIE BACKWARD INTERPOERABILITY MODE	LOW=ONLY SDVO OR PCIE X1 IS OPERATIONAL HIGH=SDVO AND PCIE X1 ARE OPERATING SIMULTANEOUSLY VIA THE PEG PORT

INVENTEC

TITLE: *Suzhou1.0*
CRESTLINE-1

SIZE	CODE	DOC. NUMBER	REV
A3	CS	*Model_No*	*x01*

SHEET 21 OF 56

CHANGE by *Drawer_Name* *16-Feb-2007*

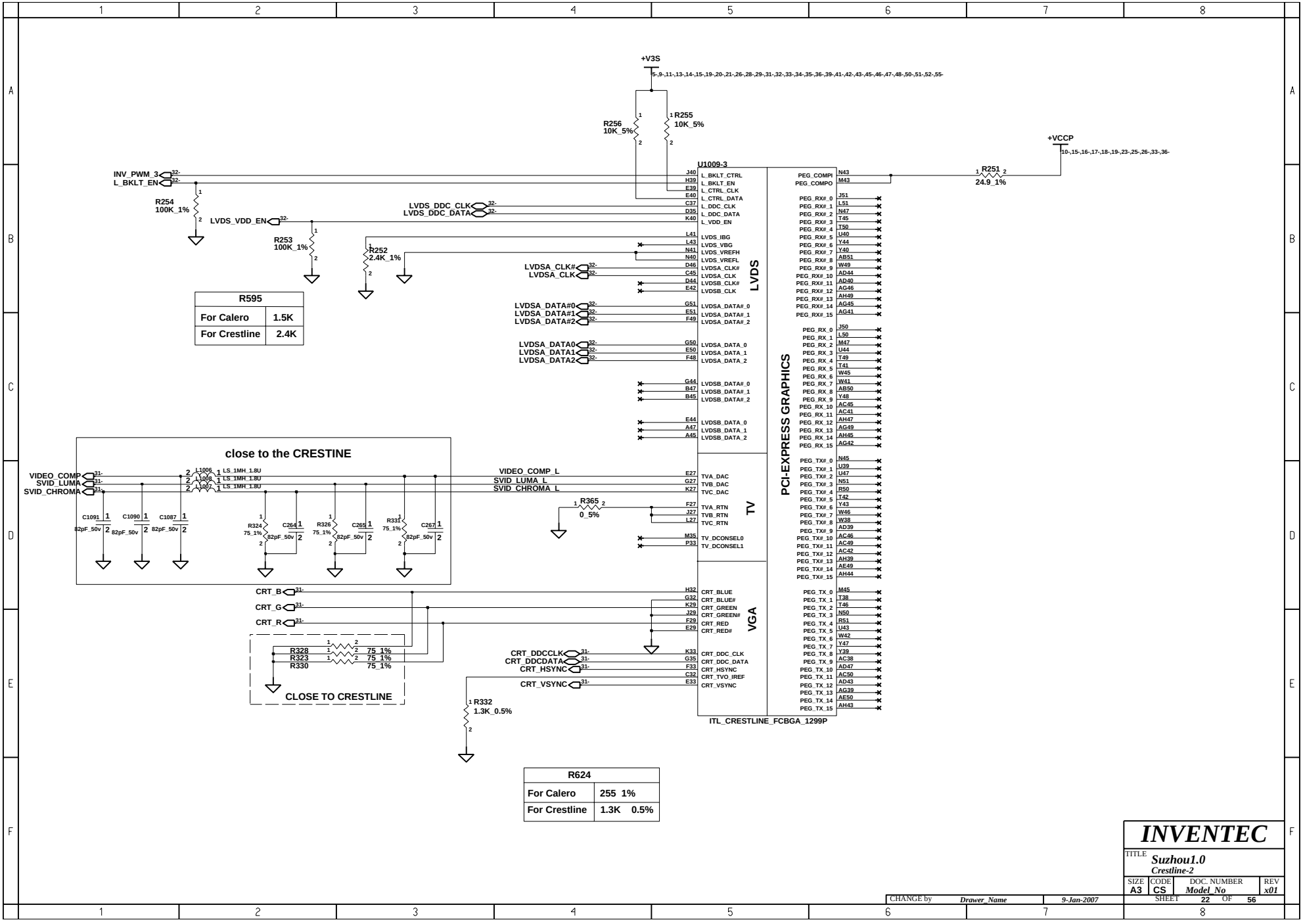

R595	
For Calero	1.5K
For Crestline	2.4K

R624	
For Calero	255 1%
For Crestline	1.3K 0.5%

INVENTEC

TITLE *Suzhou1.0*
Crestline-2

SIZE	CODE	DOC. NUMBER	REV
A3	CS	*Model_No*	*x01*

CHANGE by *Drawer_Name* *9-Jan-2007* SHEET 22 OF 56

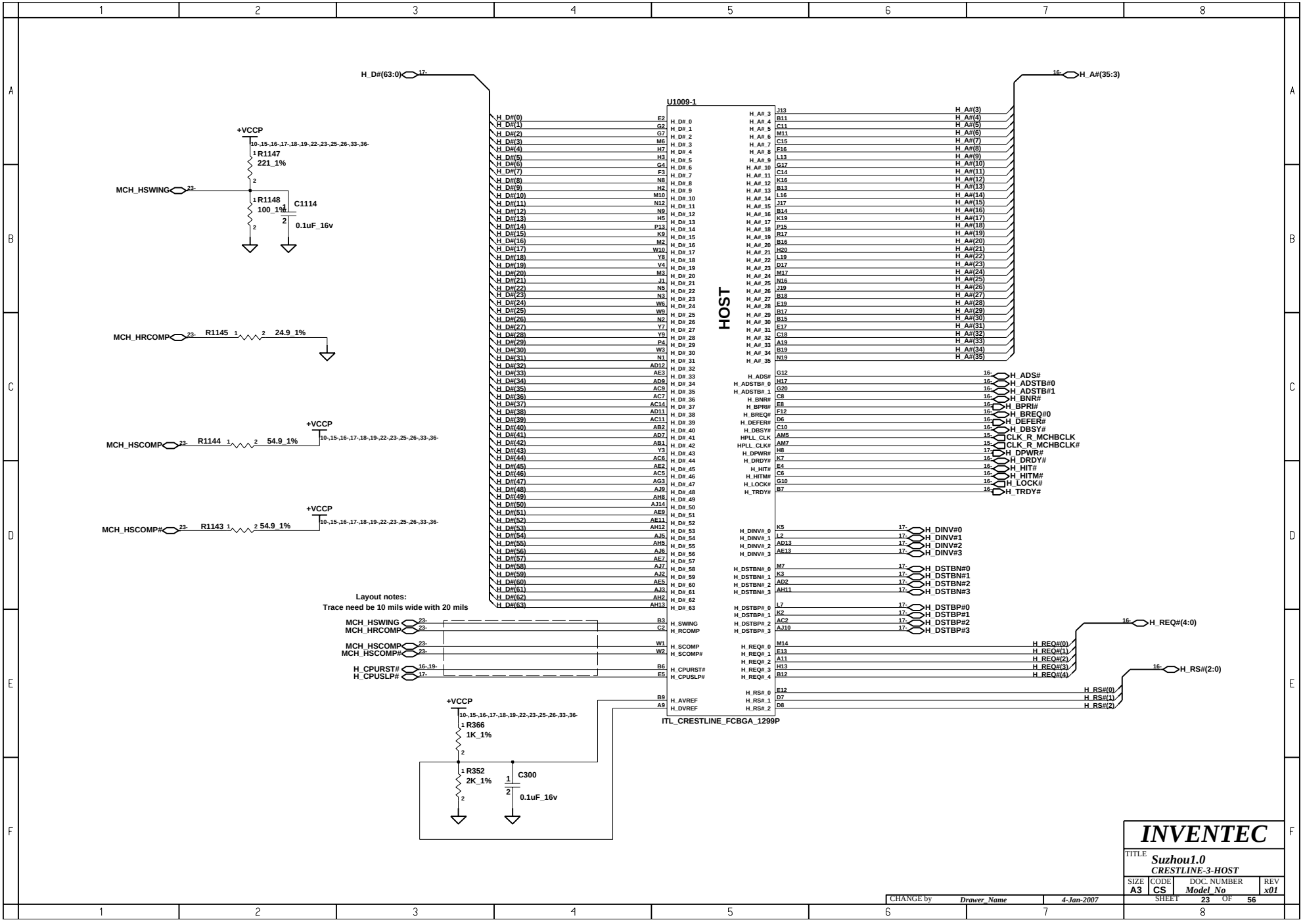
U1009-1
HOST
ITL_CRESTLINE_FCBGA_1299P
H_D#(63:0)
H_A#(35:3)
H_ADS#
H_ADSTB#0
H_ADSTB#1
H_BNR#
H_BPRI#
H_BREQ#0
H_DEFER#
H_DBSY#
CLK_R_MCHBCLK
CLK_R_MCHBCLK#
H_DPWR#
H_DRDY#
H_HIT#
H_HITM#
H_LOCK#
H_TRDY#
H_DINV#0
H_DINV#1
H_DINV#2
H_DINV#3
H_DSTBN#0
H_DSTBN#1
H_DSTBN#2
H_DSTBN#3
H_DSTBP#0
H_DSTBP#1
H_DSTBP#2
H_DSTBP#3
H_REQ#(4:0)
H_RS#(2:0)
MCH_HSWING
MCH_HRCOMP
MCH_HSCOMP
MCH_HSCOMP#
H_CPURST#
H_CPUSLP#
+VCCP
R1147 221_1%
R1148 100_1%
C1114 0.1uF_16v
R1145 24.9_1%
R1144 54.9_1%
R1143 54.9_1%
R366 1K_1%
R352 2K_1%
C300 0.1uF_16v
Layout notes:
Trace need be 10 mils wide with 20 mils
INVENTEC
TITLE
Suzhou1.0
CRESTLINE-3-HOST
SIZE A3
CODE CS
DOC. NUMBER Model_No
REV x01
CHANGE by Drawer_Name
4-Jan-2007
SHEET 23 OF 56

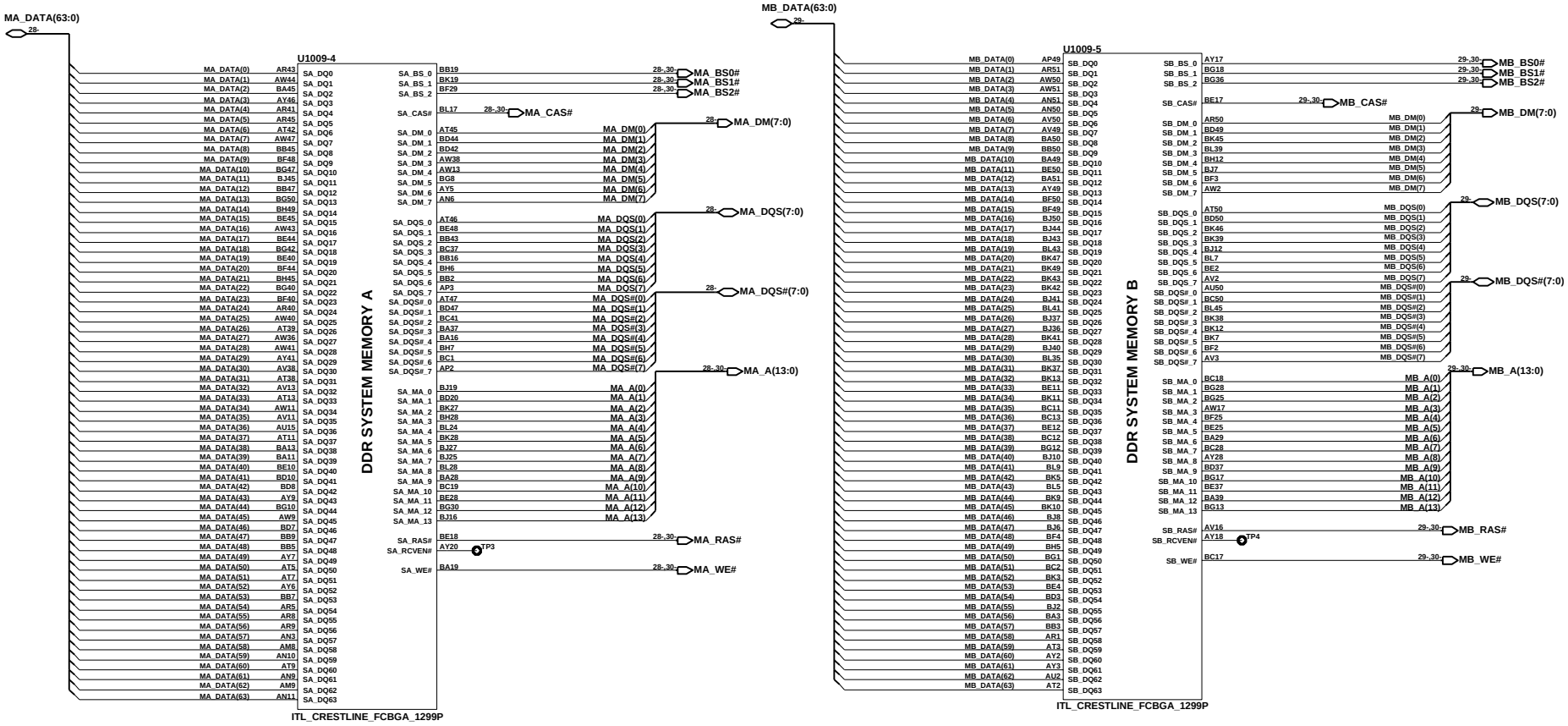

INVENTEC			
TITLE Suzhou1.0 CRESTLINE-4-DDR2			
SIZE A3	CODE CS	DOC. NUMBER Model_No	REV x01
CHANGE by Drawer_Name	4-Jan-2007	SHEET 24 OF 56	

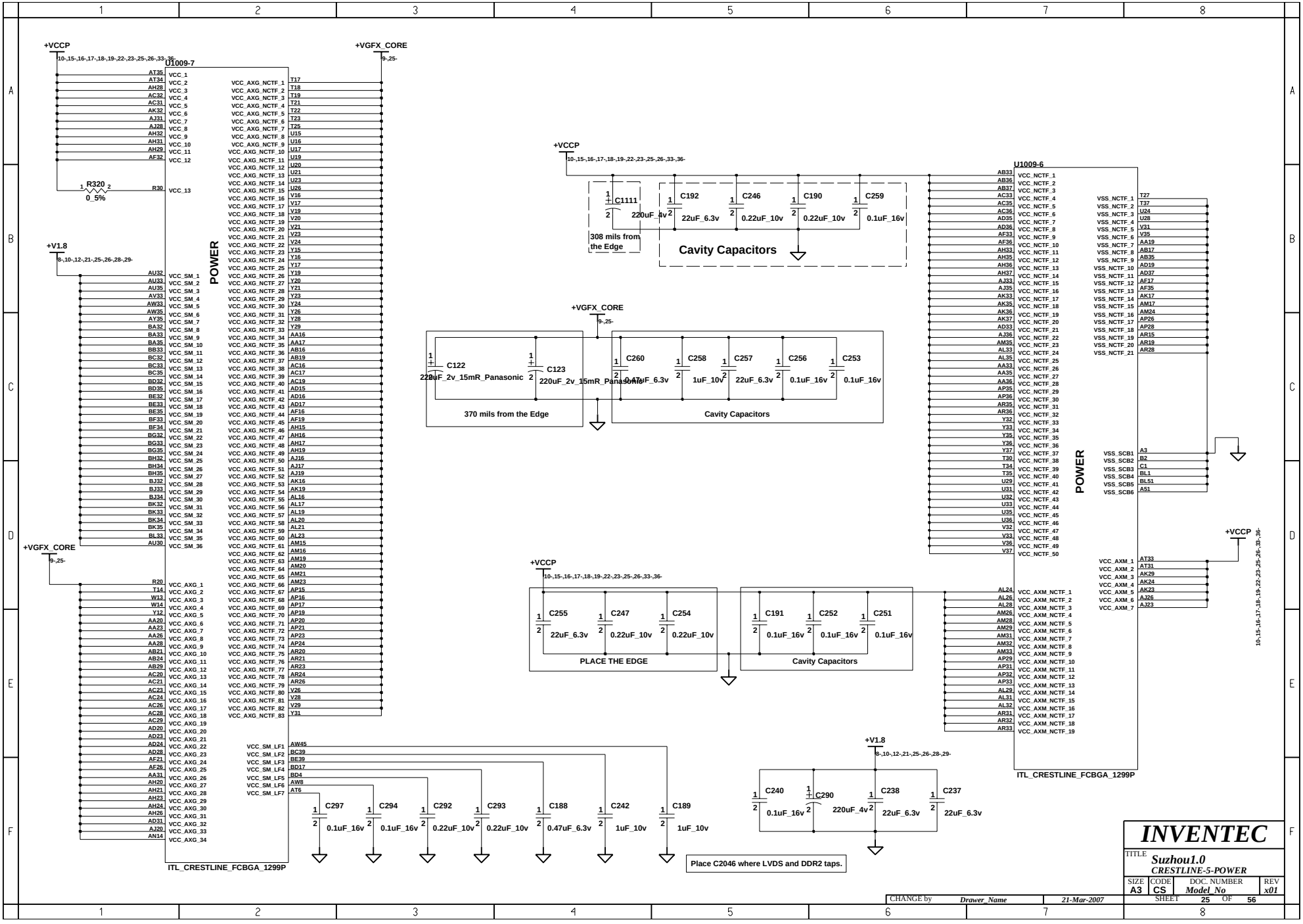
+VCCP
10-,15-,16-,17-,18-,19-,22-,23-,25-,26-,33-,36-
U1009-7
POWER
R320
0_5%
+V1.8
8-,10-,12-,21-,25-,26-,28-,29-
+VGFX_CORE
9-,25-
ITL_CRESTLINE_FCBGA_1299P
C1111
220uF_4v
308 mils from the Edge
C192
22uF_6.3v
C246
0.22uF_10v
C190
0.22uF_10v
C259
0.1uF_16v
Cavity Capacitors
C122
220uF_2v_15mR_Panasonic
C123
220uF_2v_15mR_Panasonic
370 mils from the Edge
C260
0.47uF_6.3v
C258
1uF_10v
C257
22uF_6.3v
C256
0.1uF_16v
C253
0.1uF_16v
Cavity Capacitors
U1009-6
POWER
ITL_CRESTLINE_FCBGA_1299P
C255
22uF_6.3v
C247
0.22uF_10v
C254
0.22uF_10v
PLACE THE EDGE
C191
0.1uF_16v
C252
0.1uF_16v
C251
0.1uF_16v
Cavity Capacitors
C297
0.1uF_16v
C294
0.1uF_16v
C292
0.22uF_10v
C293
0.22uF_10v
C188
0.47uF_6.3v
C242
1uF_10v
C189
1uF_10v
C240
0.1uF_16v
C290
220uF_4v
C238
22uF_6.3v
C237
22uF_6.3v
Place C2046 where LVDS and DDR2 taps.
INVENTEC
TITLE
Suzhou1.0
CRESTLINE-5-POWER
SIZE A3
CODE CS
DOC. NUMBER Model_No
REV x01
SHEET 25 OF 56
CHANGE by Drawer_Name
21-Mar-2007

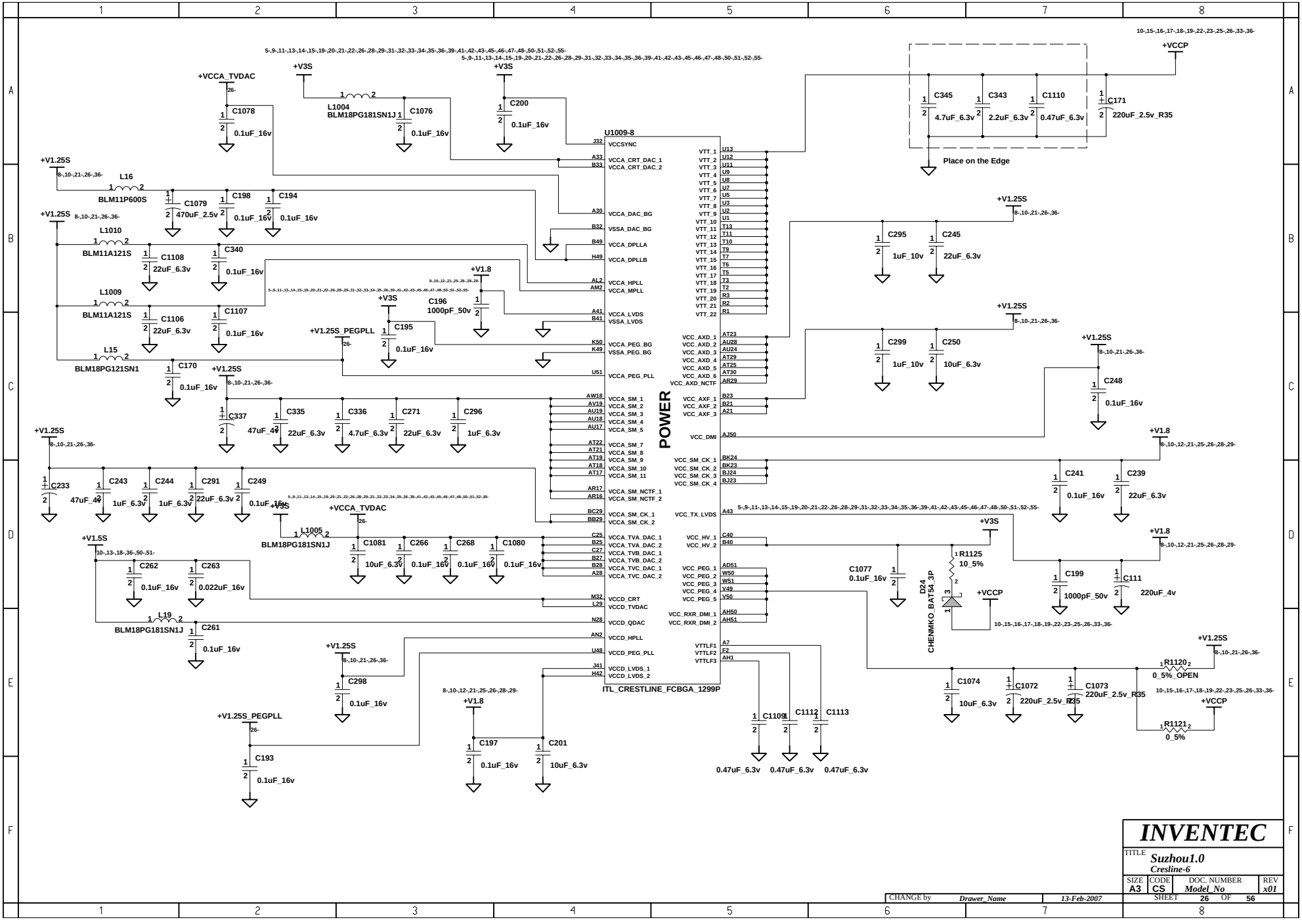

CHANGE by	Drawer_Name	13-Feb-2007	

INVENTEC

TITLE: Suzhou1.0
Cresline-6

SIZE	CODE	DOC. NUMBER	REV
A3	CS	Model_No	x01

SHEET 26 OF 56

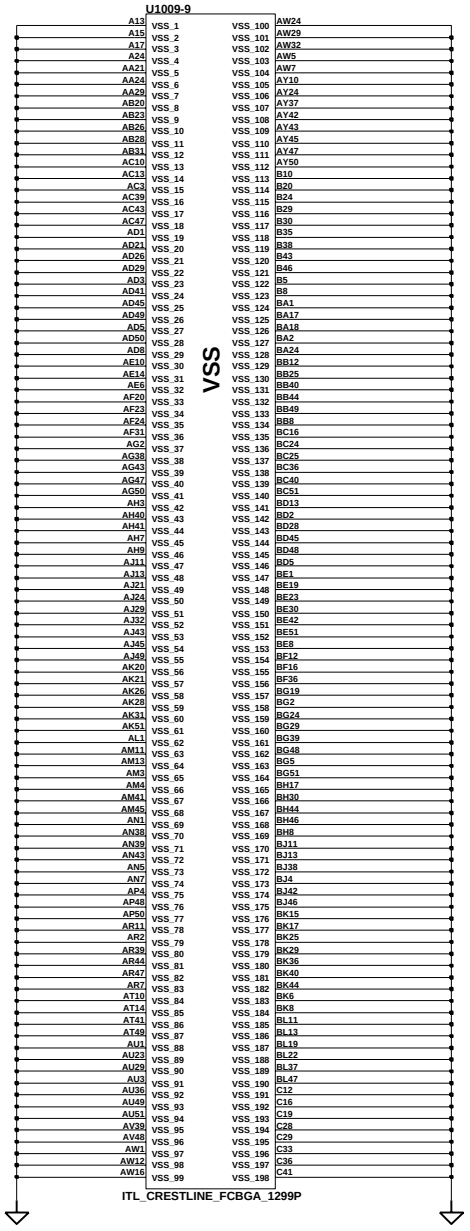

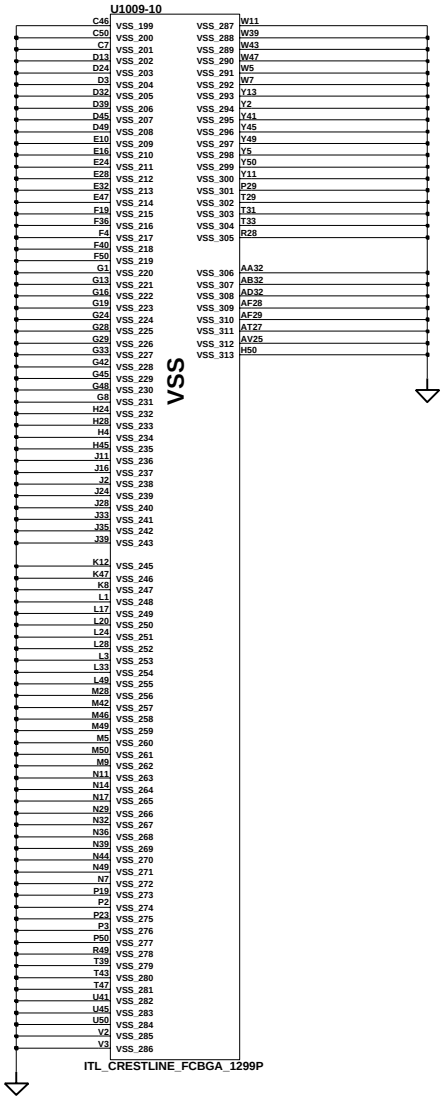

CHANGE by	Drawer_Name	21-Mar-2007	

INVENTEC

TITLE *Suzhou1.0*
CRESTLINE-7-POWER

SIZE	CODE	DOC. NUMBER	REV
A3	CS	Model_No	x01

SHEET 27 OF 56

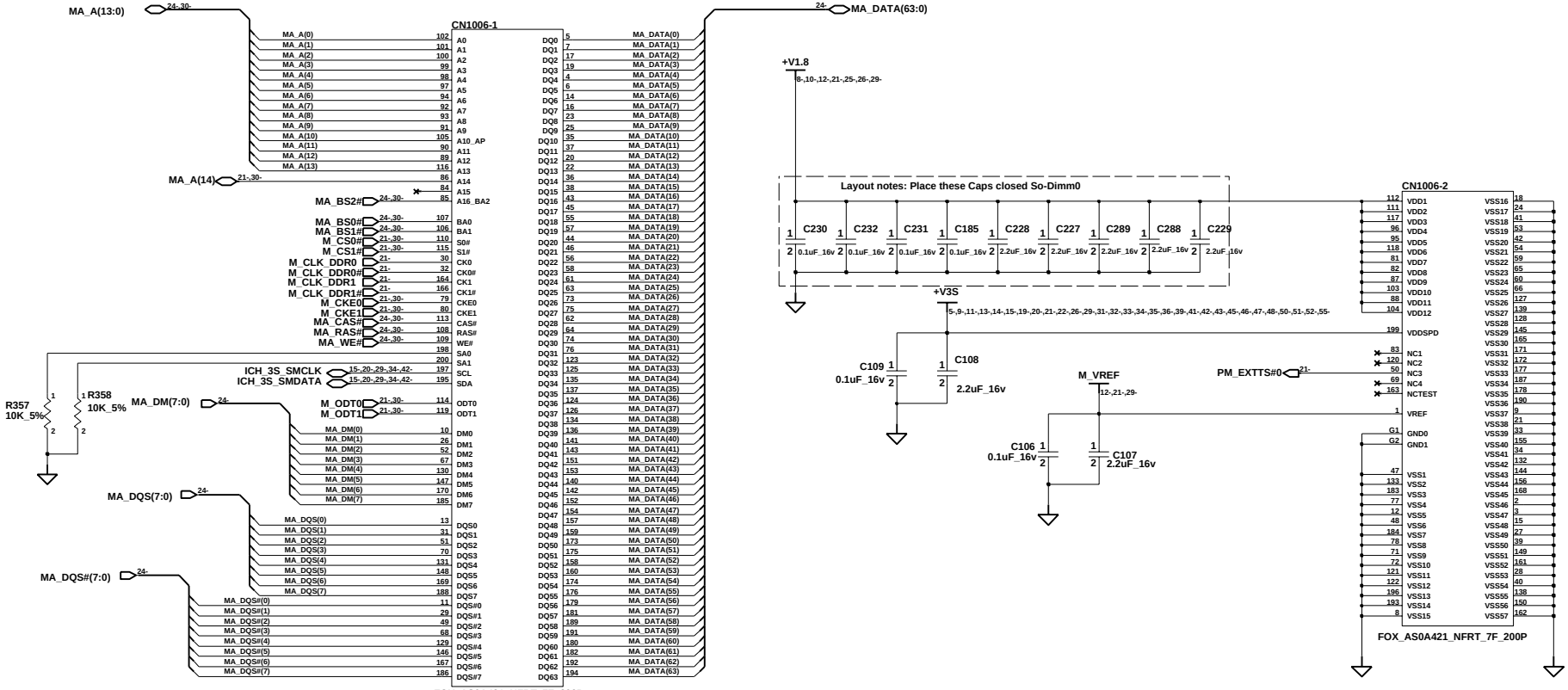

SO DIMM0_11mm

INVENTEC			
TITLE	Suzhou1.0 DDR2-DIMM-0		
SIZE A3	CODE CS	DOC. NUMBER Model_No	REV x01
CHANGE by Drawer_Name	2-Feb-2007	SHEET 28 OF 56	

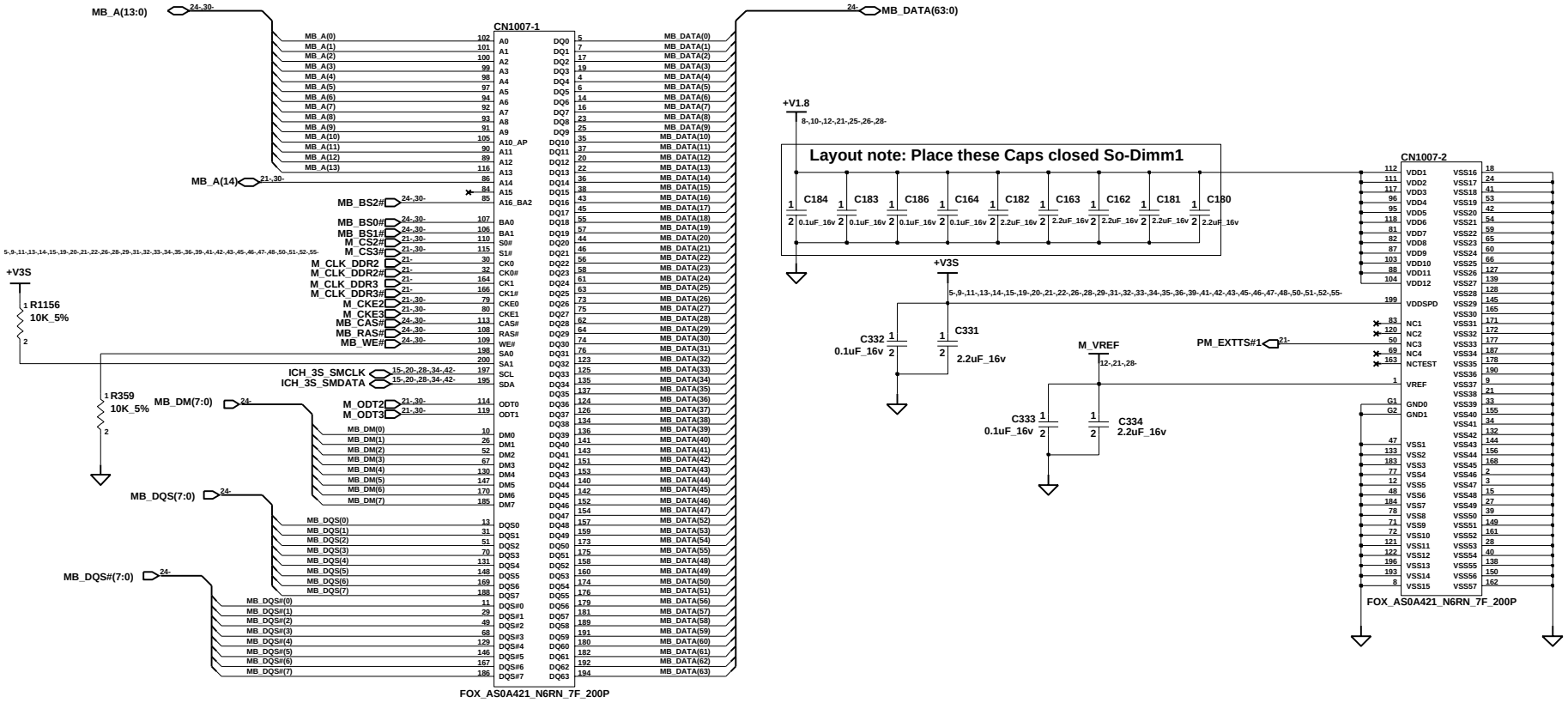

SO DIMM1 6.5mm

INVENTEC			
TITLE Suzhou1.0 DDR2-DIMM1			
SIZE A3	CODE CS	DOC. NUMBER Model_No	REV x01
CHANGE by Drawer_Name	2-Feb-2007	SHEET 29 OF 56	

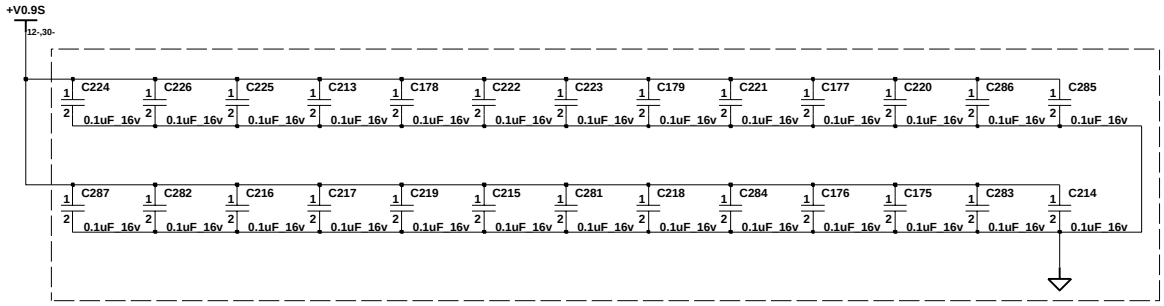

LAYOUT NOTES : PLACE ONE CAP CLOSE TO EVERY 2 PULL UP RESISTOR TERMINATED TO +V0.9S

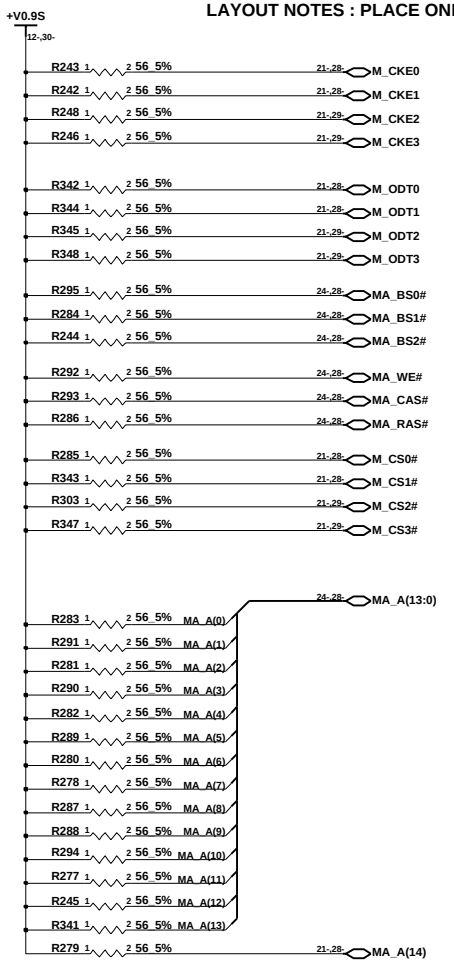

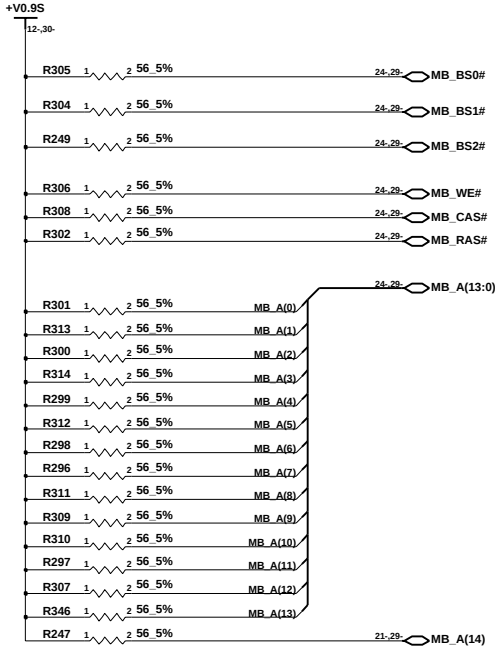

CHANGE by	Drawer_Name	27-Sep-2003	

INVENTEC

TITLE: *Suzhou1.0*
DDR2-DAMPING

SIZE	CODE	DOC. NUMBER	REV
A3	CS	*Model_No*	*x01*

SHEET 30 OF 56

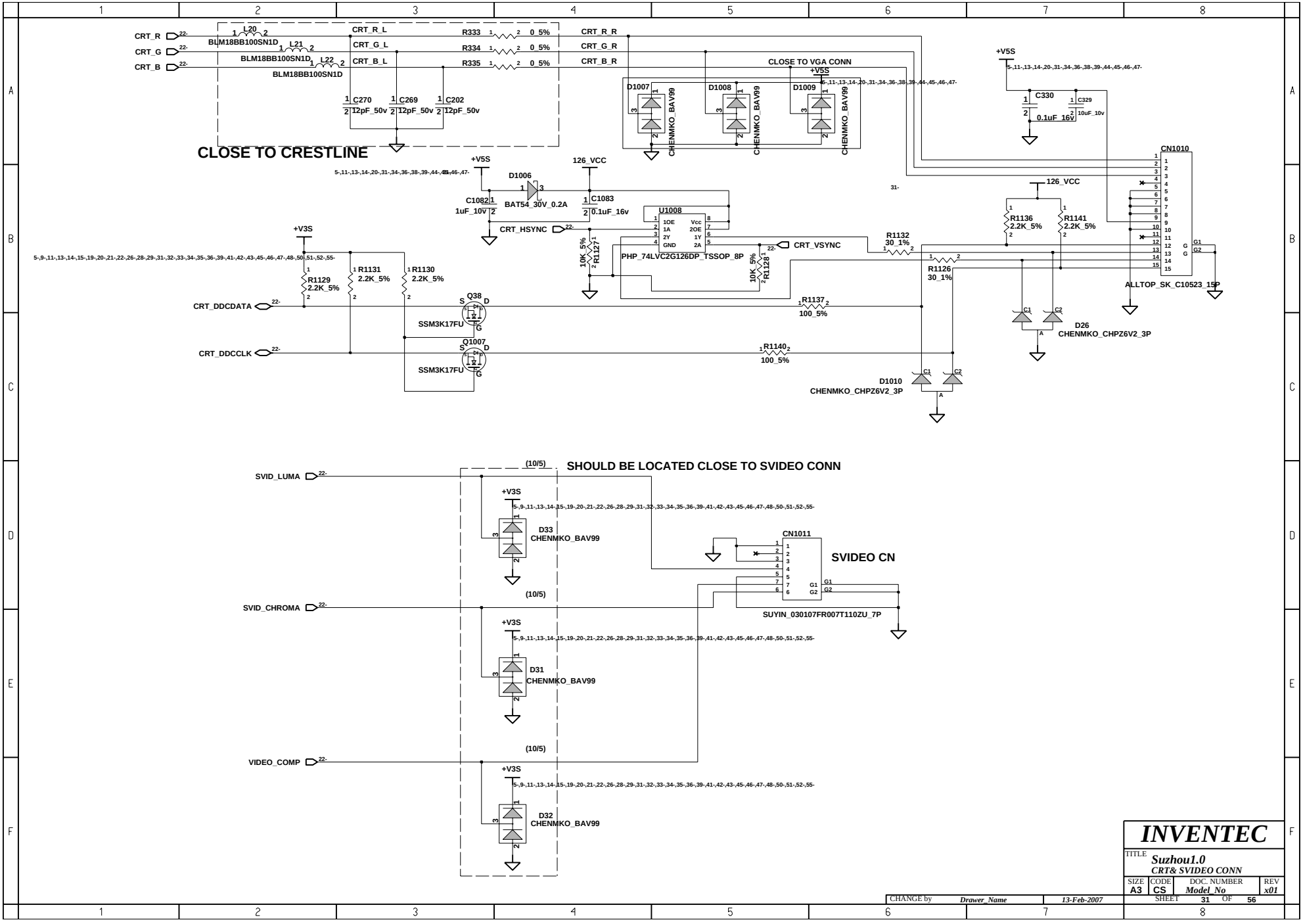

INVENTEC			
TITLE Suzhou1.0 CRT& SVIDEO CONN			
SIZE A3	CODE CS	DOC. NUMBER Model_No	REV x01
CHANGE by Drawer_Name	13-Feb-2007	SHEET 31 OF 56	

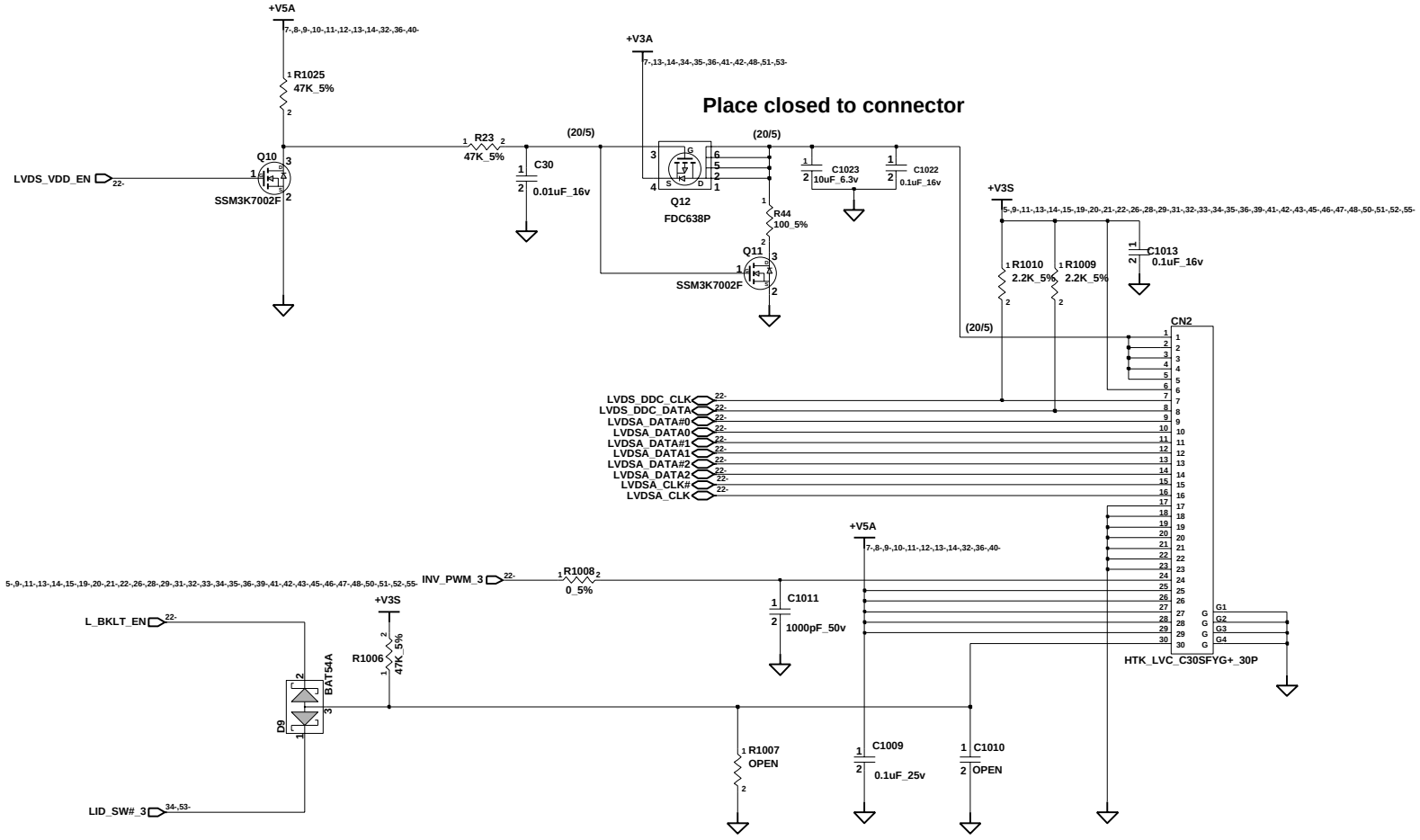

CHANGE by	Drawer_Name	21-Mar-2007	

INVENTEC

TITLE *Suzhou1.0*
LCD CONN

SIZE	CODE	DOC. NUMBER	REV
A3	CS	Model_No	x01

SHEET 32 OF 56

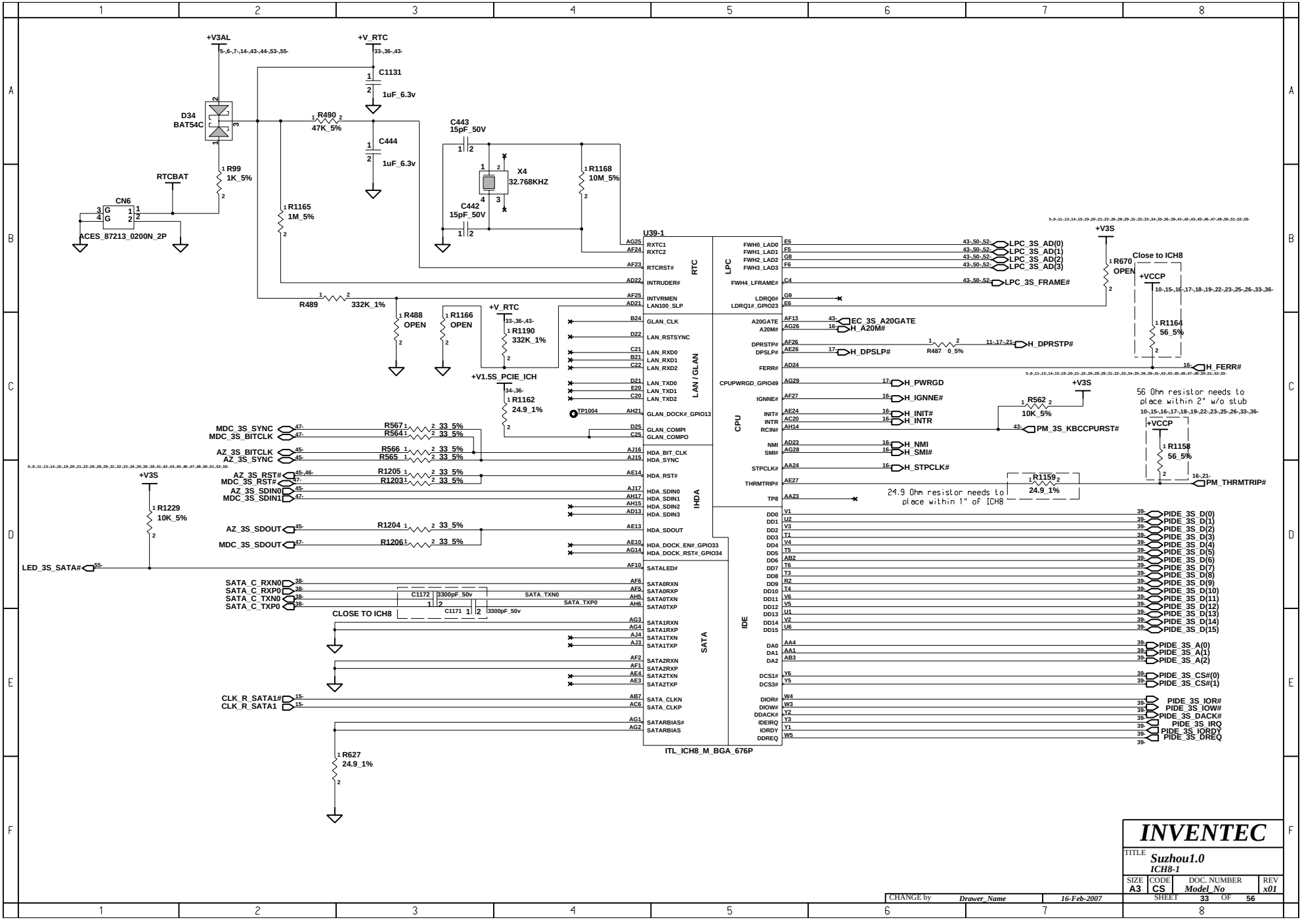
+V3AL
+V_RTC
C1131
1uF_6.3v
D34
BAT54C
R490
47K_5%
C444
1uF_6.3v
C443
15pF_50V
X4
32.768KHZ
C442
15pF_50V
R1168
10M_5%
R99
1K_5%
RTCBAT
CN6
ACES_87213_0200N_2P
R1165
1M_5%
R489
332K_1%
R488
OPEN
R1166
OPEN
R1190
332K_1%
+V1.5S_PCIE_ICH
R1162
24.9_1%
TP1004
U39-1
RTC
LPC
LAN / GLAN
IHDA
SATA
CPU
IDE
ITL_ICH8_M_BGA_676P
LPC_3S_AD(0)
LPC_3S_AD(1)
LPC_3S_AD(2)
LPC_3S_AD(3)
LPC_3S_FRAME#
R670
OPEN
Close to ICH8
+VCCP
R1164
56_5%
H_FERR#
EC_3S_A20GATE
H_A20M#
H_DPRSTP#
H_DPSLP#
R487 0_5%
H_PWRGD
H_IGNNE#
H_INIT#
H_INTR
PM_3S_KBCCPURST#
R562
10K_5%
56 Ohm resistor needs to place within 2" w/o stub
R1158
56_5%
H_NMI
H_SMI#
H_STPCLK#
PM_THRMTRIP#
R1159
24.9_1%
24.9 Ohm resistor needs to place within 1" of ICH8
MDC_3S_SYNC
MDC_3S_BITCLK
AZ_3S_BITCLK
AZ_3S_SYNC
AZ_3S_RST#
MDC_3S_RST#
AZ_3S_SDIN0
MDC_3S_SDIN1
AZ_3S_SDOUT
MDC_3S_SDOUT
R567
R564
R566
R565
R1205
R1203
R1204
R1206
33_5%
R1229
10K_5%
LED_3S_SATA#
SATA_C_RXN0
SATA_C_RXP0
SATA_C_TXN0
SATA_C_TXP0
C1172
3300pF_50v
C1171
3300pF_50v
SATA_TXN0
SATA_TXP0
CLOSE TO ICH8
CLK_R_SATA1#
CLK_R_SATA1
R627
24.9_1%
PIDE_3S_D(0)
PIDE_3S_D(1)
PIDE_3S_D(2)
PIDE_3S_D(3)
PIDE_3S_D(4)
PIDE_3S_D(5)
PIDE_3S_D(6)
PIDE_3S_D(7)
PIDE_3S_D(8)
PIDE_3S_D(9)
PIDE_3S_D(10)
PIDE_3S_D(11)
PIDE_3S_D(12)
PIDE_3S_D(13)
PIDE_3S_D(14)
PIDE_3S_D(15)
PIDE_3S_A(0)
PIDE_3S_A(1)
PIDE_3S_A(2)
PIDE_3S_CS#(0)
PIDE_3S_CS#(1)
PIDE_3S_IOR#
PIDE_3S_IOW#
PIDE_3S_DACK#
PIDE_3S_IRQ
PIDE_3S_IORDY
PIDE_3S_DREQ
INVENTEC
TITLE
Suzhou1.0
ICH8-1
SIZE A3
CODE CS
DOC. NUMBER Model_No
REV x01
SHEET 33 OF 56
CHANGE by Drawer_Name
16-Feb-2007

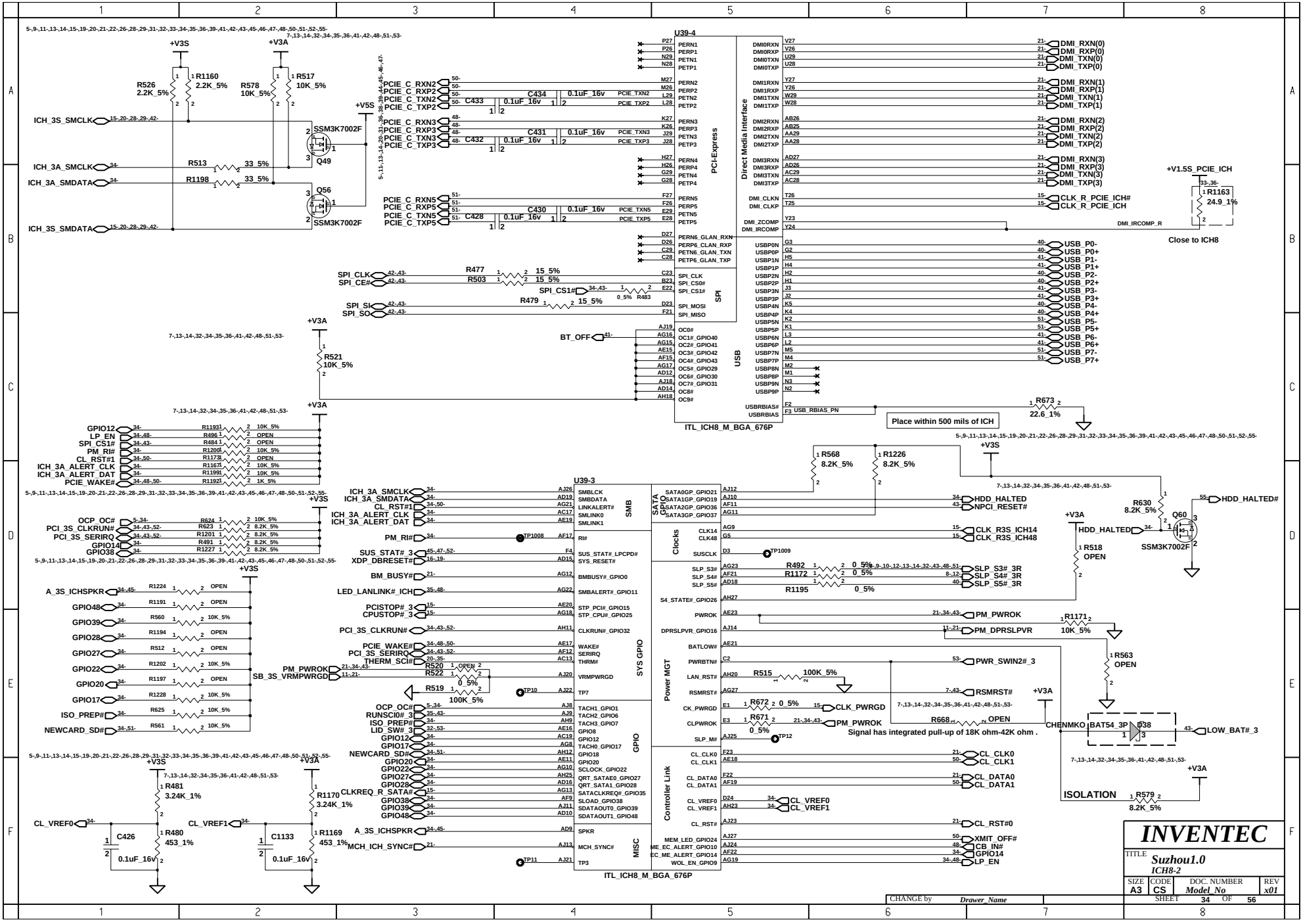
U39-4
PCI-Express
Direct Media Interface
SPI
USB
ITL_ICH8_M_BGA_676P
U39-3
SMB
SATA GPIO
Clocks
Power MGT
SYS GPIO
GPIO
Controller Link
MISC
ITL_ICH8_M_BGA_676P
Place within 500 mils of ICH
Close to ICH8
Signal has integrated pull-up of 18K ohm-42K ohm .
ISOLATION
INVENTEC
Suzhou1.0
ICH8-2
SIZE A3
CODE CS
DOC. NUMBER Model_No
REV x01
SHEET 34 OF 56
CHANGE by Drawer_Name

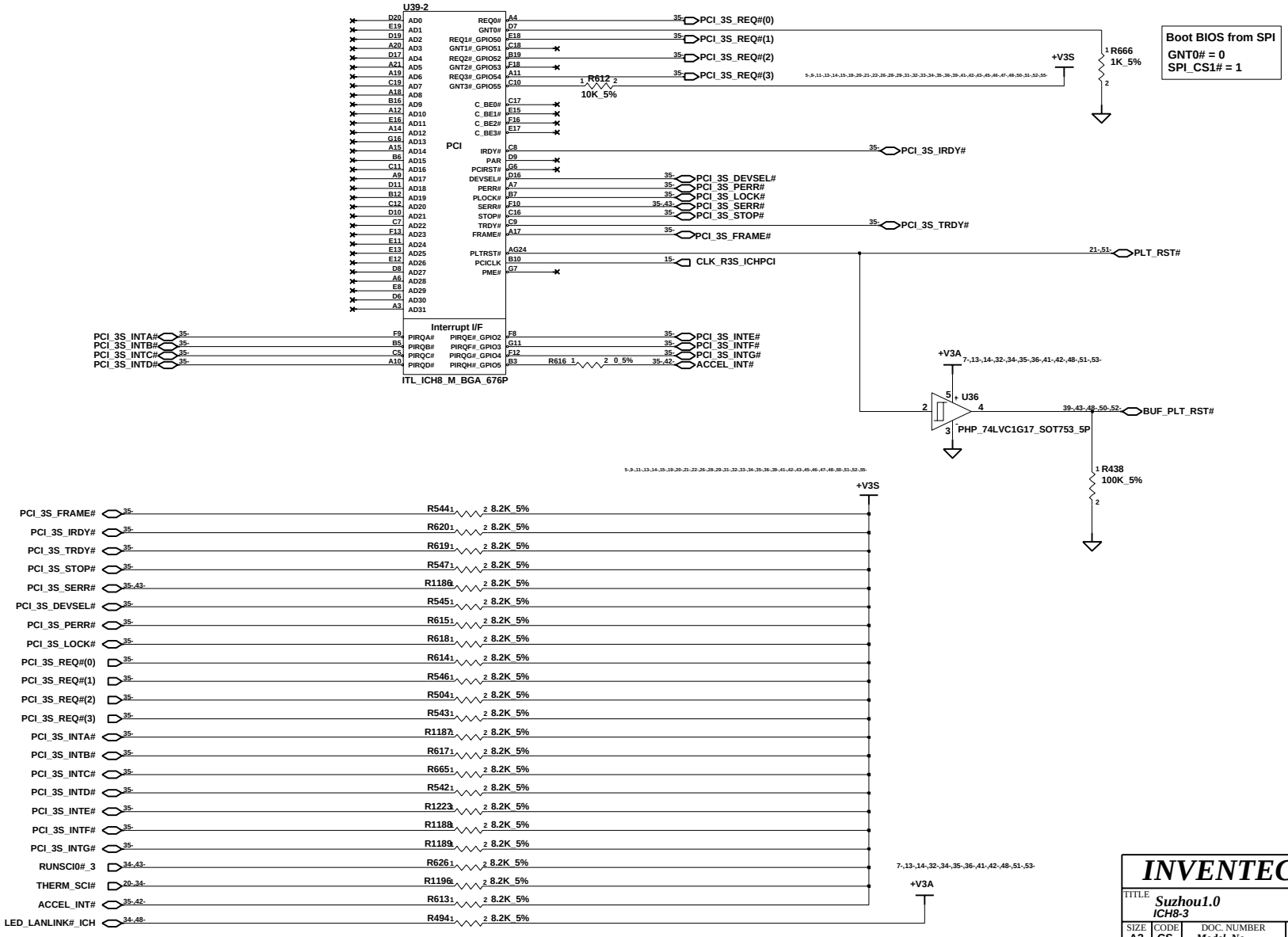
U39-2
PCI
Interrupt I/F
ITL_ICH8_M_BGA_676P
PCI_3S_REQ#(0)
PCI_3S_REQ#(1)
PCI_3S_REQ#(2)
PCI_3S_REQ#(3)
PCI_3S_IRDY#
PCI_3S_DEVSEL#
PCI_3S_PERR#
PCI_3S_LOCK#
PCI_3S_SERR#
PCI_3S_STOP#
PCI_3S_TRDY#
PCI_3S_FRAME#
PLT_RST#
CLK_R3S_ICHPCI
PCI_3S_INTA#
PCI_3S_INTB#
PCI_3S_INTC#
PCI_3S_INTD#
PCI_3S_INTE#
PCI_3S_INTF#
PCI_3S_INTG#
ACCEL_INT#
R612 10K_5%
R666 1K_5%
+V3S
Boot BIOS from SPI
GNT0# = 0
SPI_CS1# = 1
+V3A
U36
PHP_74LVC1G17_SOT753_5P
BUF_PLT_RST#
R438 100K_5%
R616 0_5%
PCI_3S_FRAME#
PCI_3S_IRDY#
PCI_3S_TRDY#
PCI_3S_STOP#
PCI_3S_SERR#
PCI_3S_DEVSEL#
PCI_3S_PERR#
PCI_3S_LOCK#
PCI_3S_REQ#(0)
PCI_3S_REQ#(1)
PCI_3S_REQ#(2)
PCI_3S_REQ#(3)
PCI_3S_INTA#
PCI_3S_INTB#
PCI_3S_INTC#
PCI_3S_INTD#
PCI_3S_INTE#
PCI_3S_INTF#
PCI_3S_INTG#
RUNSCI0#_3
THERM_SCI#
ACCEL_INT#
LED_LANLINK#_ICH
8.2K_5%
INVENTEC
TITLE
Suzhou1.0
ICH8-3
SIZE A3
CODE CS
DOC. NUMBER Model_No
REV x01
SHEET 35 OF 56
CHANGE by Drawer_Name
9-Jan-2007

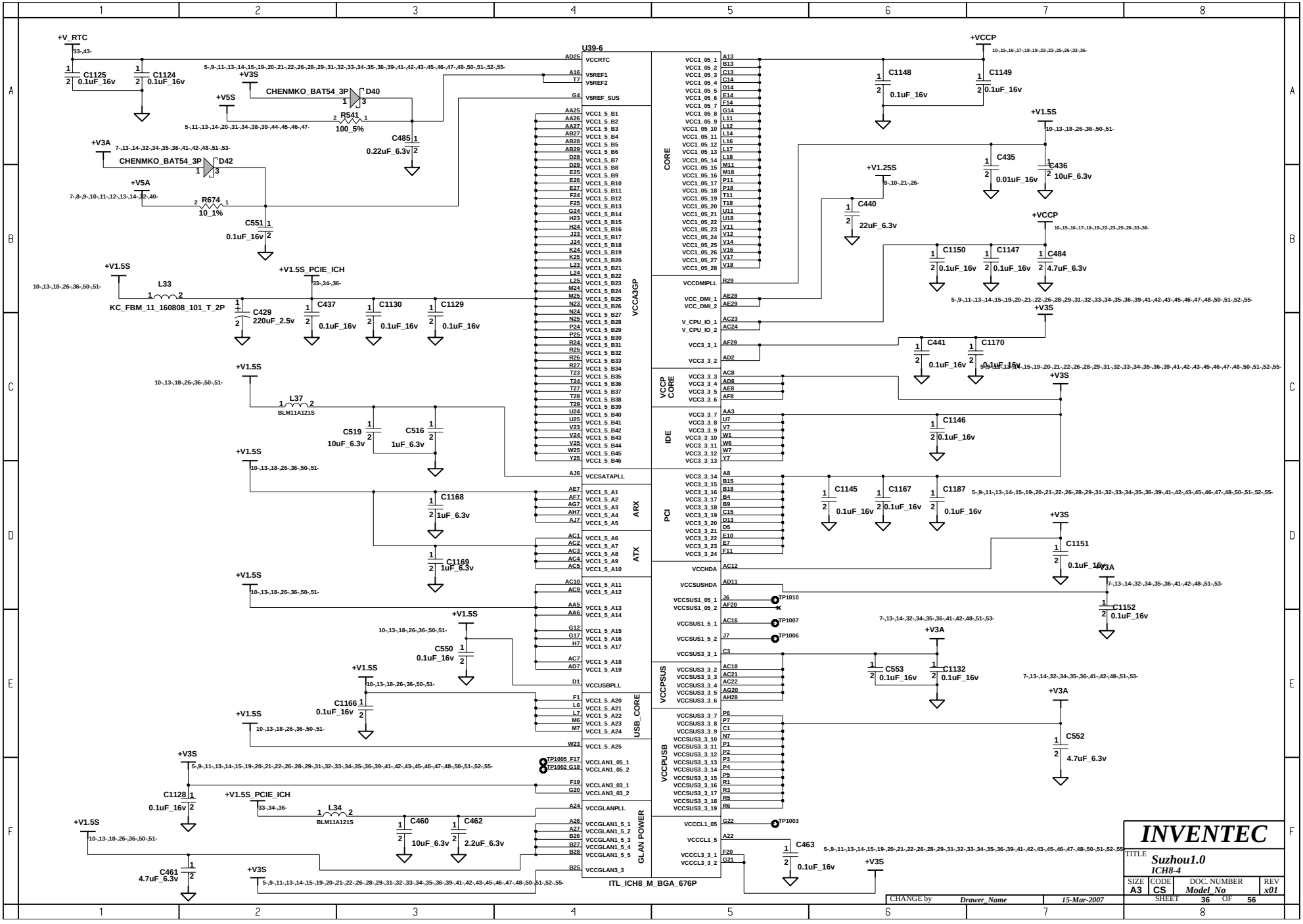
U39-6
ITL_ICH8_M_BGA_676P
CORE
VCCA3GP
VCCP CORE
IDE
PCI
ARX
ATX
USB_CORE
VCCPSUS
VCCPUSB
GLAN POWER
+V_RTC
+V3S
+V5S
+V3A
+V5A
+V1.5S
+V1.5S_PCIE_ICH
+V1.25S
+VCCP
CHENMKO_BAT54_3P
D40
D42
R541
100_5%
R674
10_1%
C485
0.22uF_6.3v
C551
0.1uF_16v
C1125
0.1uF_16v
C1124
0.1uF_16v
L33
KC_FBM_11_160808_101_T_2P
C429
220uF_2.5v
C437
0.1uF_16v
C1130
0.1uF_16v
C1129
0.1uF_16v
L37
BLM11A121S
C519
10uF_6.3v
C516
1uF_6.3v
C1168
1uF_6.3v
C1169
1uF_6.3v
C550
0.1uF_16v
C1166
0.1uF_16v
C1128
0.1uF_16v
L34
BLM11A121S
C460
10uF_6.3v
C462
2.2uF_6.3v
C461
4.7uF_6.3v
C1148
0.1uF_16v
C1149
0.1uF_16v
C435
0.01uF_16v
C436
10uF_6.3v
C440
22uF_6.3v
C1150
0.1uF_16v
C1147
0.1uF_16v
C484
4.7uF_6.3v
C441
0.1uF_16v
C1170
0.1uF_16v
C1146
0.1uF_16v
C1145
0.1uF_16v
C1167
0.1uF_16v
C1187
0.1uF_16v
C1151
0.1uF_16v
C1152
0.1uF_16v
C553
0.1uF_16v
C1132
0.1uF_16v
C552
4.7uF_6.3v
C463
0.1uF_16v
TP1010
TP1007
TP1006
TP1005_F17
TP1002_G18
TP1003
INVENTEC
TITLE
Suzhou1.0
ICH8-4
SIZE A3
CODE CS
DOC. NUMBER Model_No
REV x01
SHEET 36 OF 56
CHANGE by Drawer_Name
15-Mar-2007

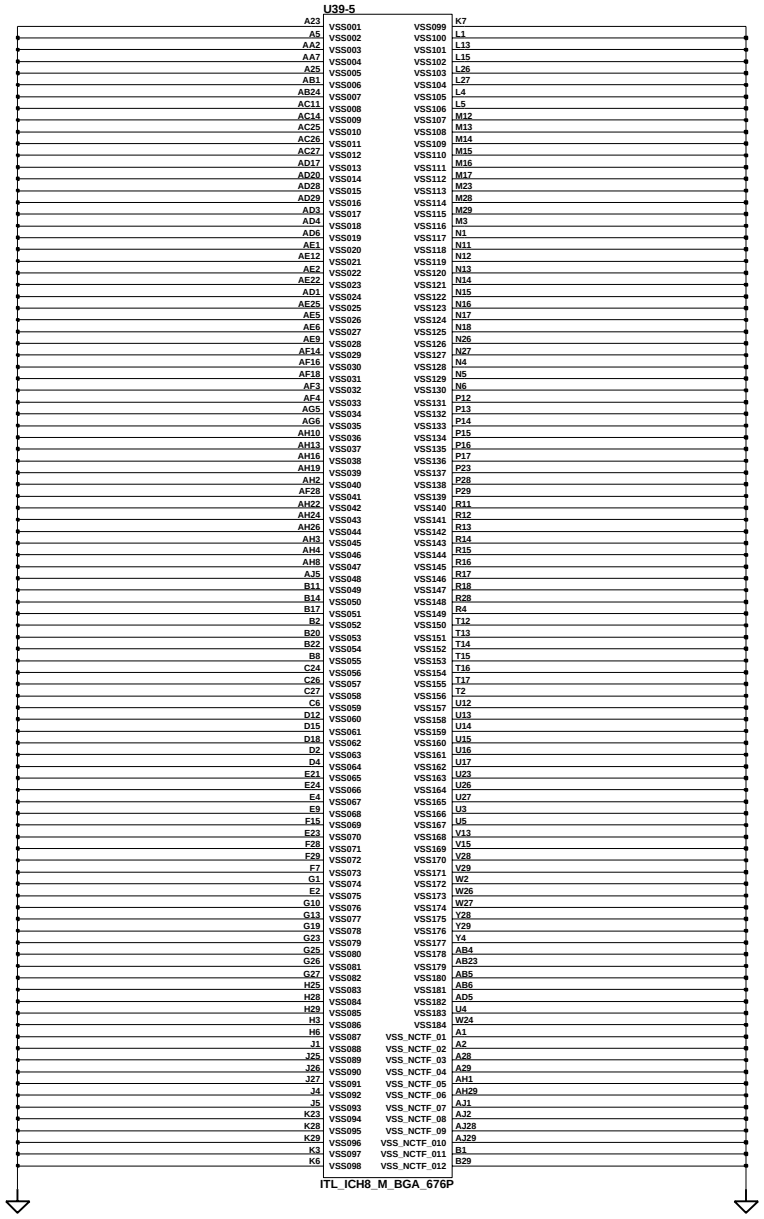

CHANGE by	Drawer_Name	21-Mar-2007	

INVENTEC

TITLE *Suzhou1.0*
ICH8-5

SIZE	CODE	DOC. NUMBER	REV
A3	CS	*Model_No*	*x01*

SHEET 37 OF 56

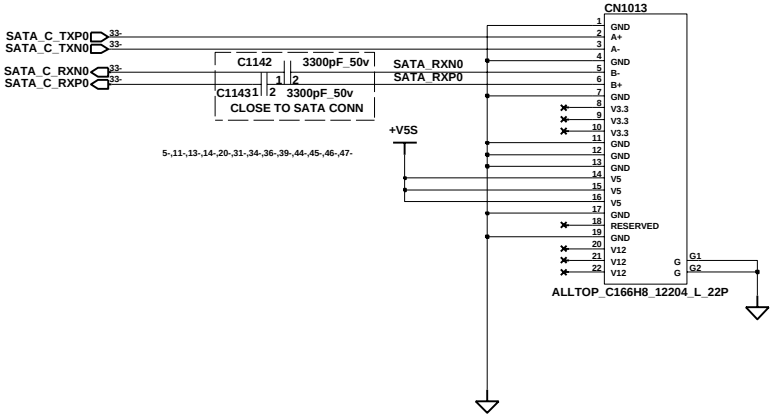

CHANGE by	Drawer_Name	2-Feb-2007	

INVENTEC

TITLE *Suzhou1.0*
HDD CONN

SIZE	CODE	DOC. NUMBER	REV
A3	CS	Model_No	x01

SHEET 38 OF 56

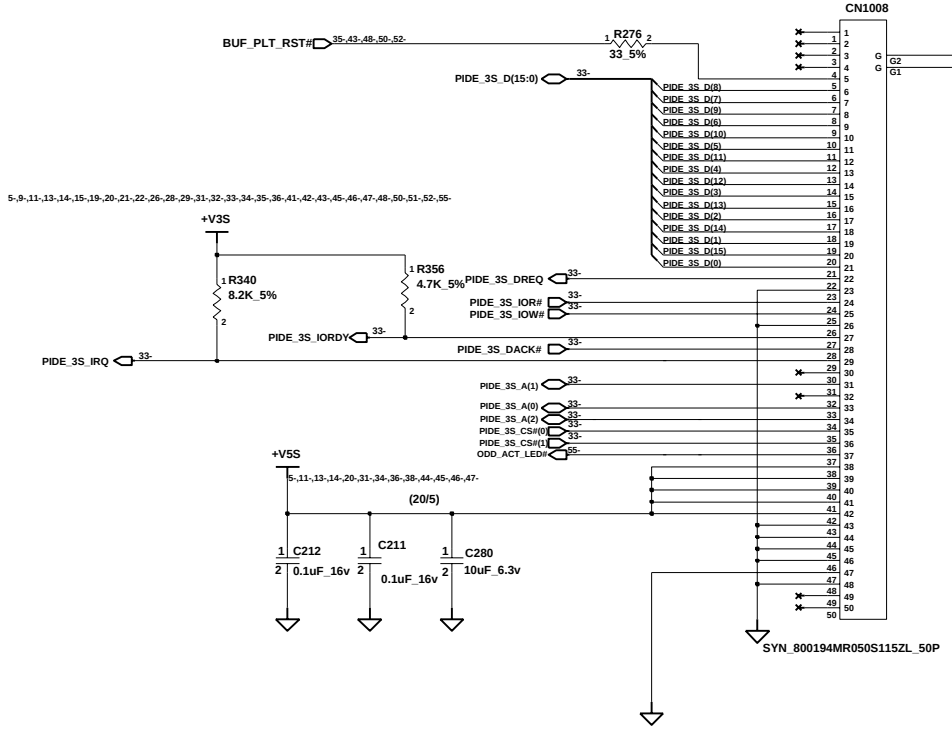

CHANGE by	Drawer_Name	21-Mar-2007	

INVENTEC

TITLE **Suzhou1.0**
ODD CONN

SIZE	CODE	DOC. NUMBER	REV
A3	CS	Model_No	x01

SHEET 39 OF 56

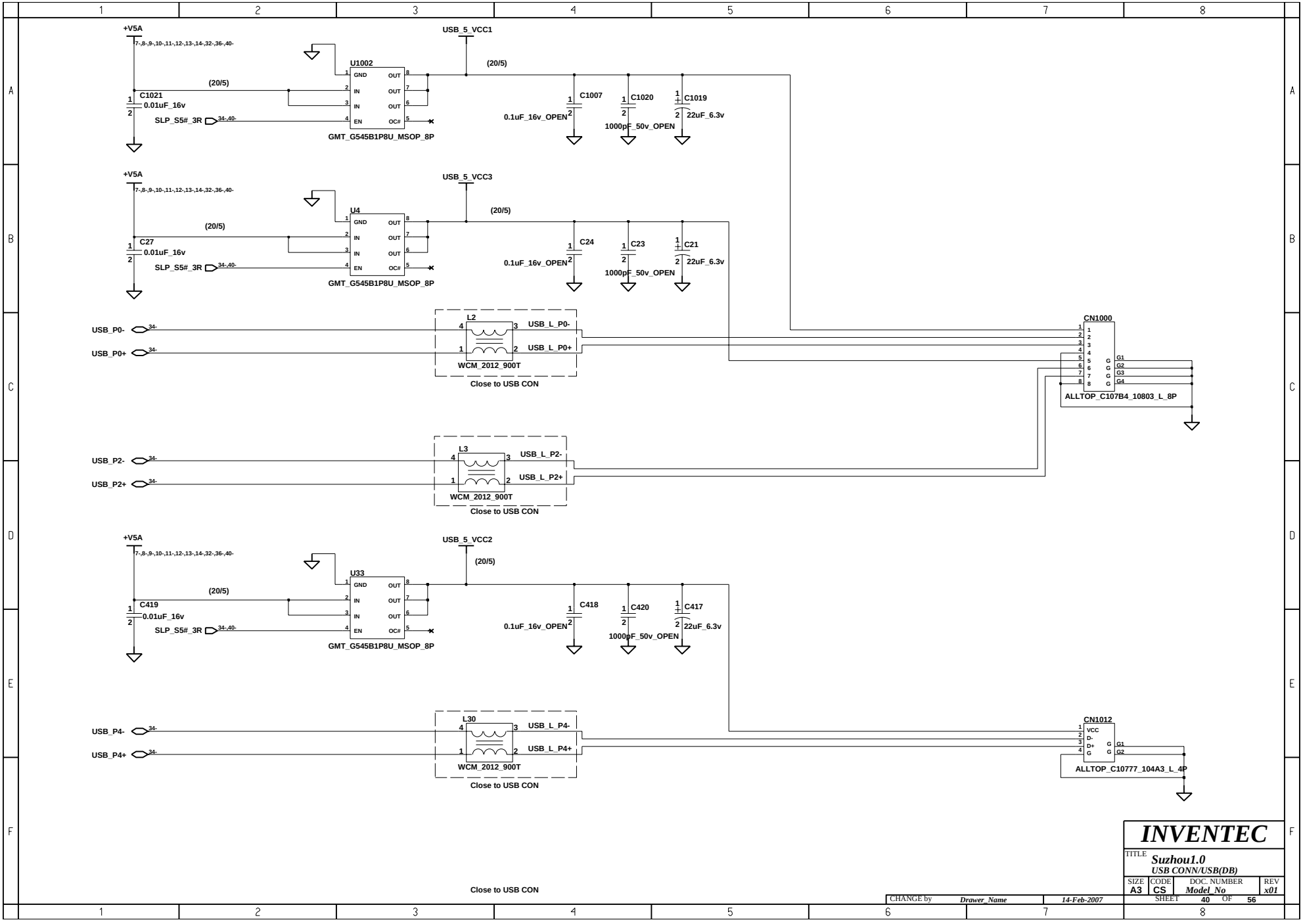
+V5A
7-,8-,9-,10-,11-,12-,13-,14-,32-,36-,40-
U1002
GND
OUT
IN
OUT
IN
OUT
EN
OC#
GMT_G545B1P8U_MSOP_8P
USB_5_VCC1
(20/5)
C1021
0.01uF_16v
SLP_S5#_3R
34-,40-
C1007
0.1uF_16v_OPEN
C1020
1000pF_50v_OPEN
C1019
22uF_6.3v
U4
USB_5_VCC3
C27
C24
C23
C21
L2
USB_P0-
USB_P0+
USB_L_P0-
USB_L_P0+
WCM_2012_900T
Close to USB CON
CN1000
ALLTOP_C107B4_10803_L_8P
L3
USB_P2-
USB_P2+
USB_L_P2-
USB_L_P2+
U33
USB_5_VCC2
C419
C418
C420
C417
L30
USB_P4-
USB_P4+
USB_L_P4-
USB_L_P4+
CN1012
VCC
D-
D+
ALLTOP_C10777_104A3_L_4P
INVENTEC
TITLE
Suzhou1.0
USB CONN/USB(DB)
SIZE A3
CODE CS
DOC. NUMBER Model_No
REV x01
CHANGE by Drawer_Name
14-Feb-2007
SHEET 40 OF 56

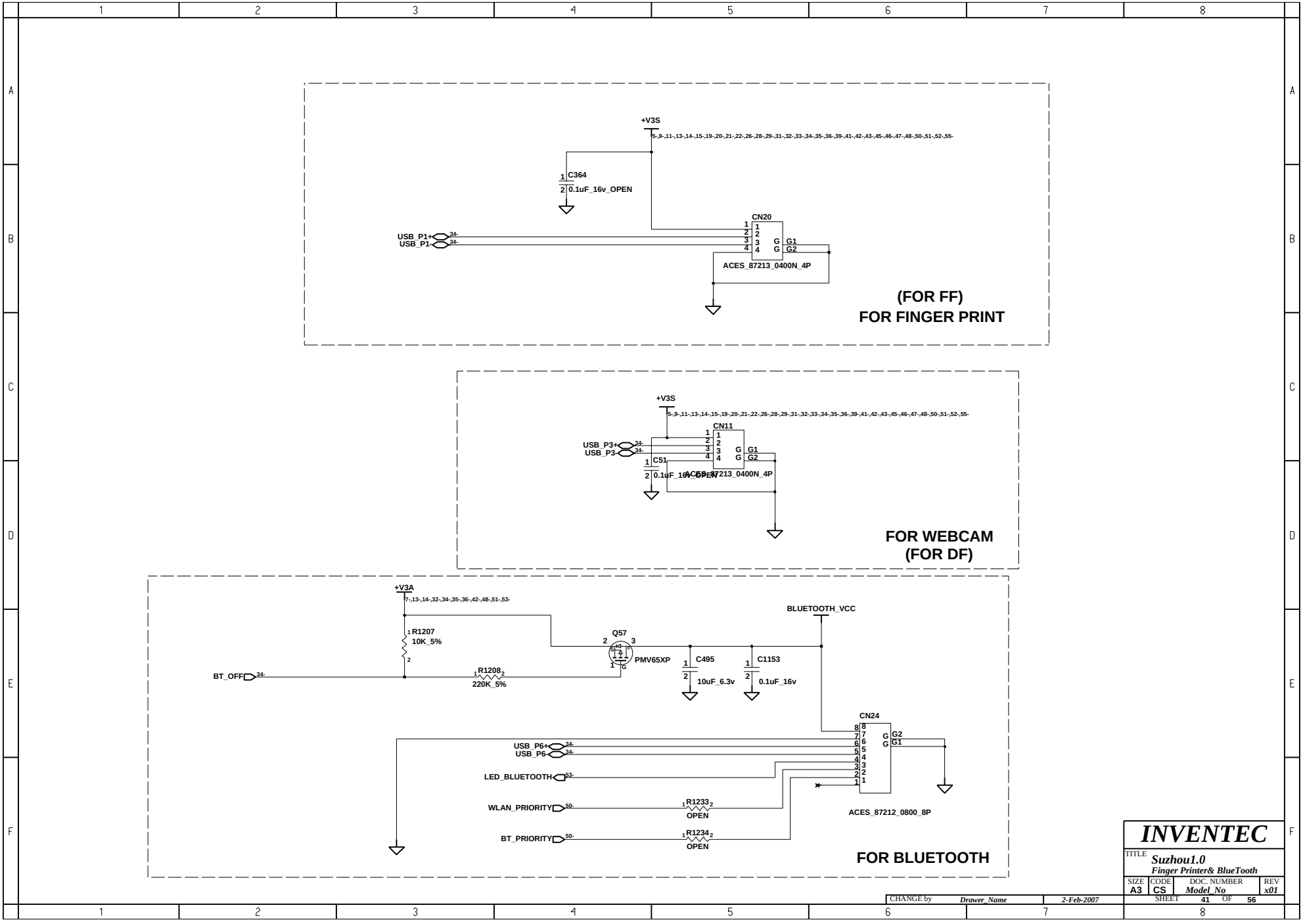
+V3S
5-,9-,11-,13-,14-,15-,19-,20-,21-,22-,26-,28-,29-,31-,32-,33-,34-,35-,36-,39-,41-,42-,43-,45-,46-,47-,48-,50-,51-,52-,55-
C364
0.1uF_16v_OPEN
CN20
USB_P1+
USB_P1-
34-
G1
G2
ACES_87213_0400N_4P
(FOR FF)
FOR FINGER PRINT
+V3S
5-,9-,11-,13-,14-,15-,19-,20-,21-,22-,26-,28-,29-,31-,32-,33-,34-,35-,36-,39-,41-,42-,43-,45-,46-,47-,48-,50-,51-,52-,55-
CN11
USB_P3+
USB_P3-
C51
0.1uF_16v_OPEN
ACES_87213_0400N_4P
FOR WEBCAM
(FOR DF)
+V3A
7-,13-,14-,32-,34-,35-,36-,42-,48-,51-,53-
R1207
10K_5%
BT_OFF
R1208
220K_5%
Q57
PMV65XP
C495
10uF_6.3v
C1153
0.1uF_16v
BLUETOOTH_VCC
CN24
USB_P6+
USB_P6-
LED_BLUETOOTH
53-
WLAN_PRIORITY
50-
R1233
OPEN
BT_PRIORITY
R1234
OPEN
ACES_87212_0800_8P
FOR BLUETOOTH
INVENTEC
TITLE
Suzhou1.0
Finger Printer& BlueTooth
SIZE A3
CODE CS
DOC. NUMBER Model_No
REV x01
CHANGE by Drawer_Name
2-Feb-2007
SHEET 41 OF 56

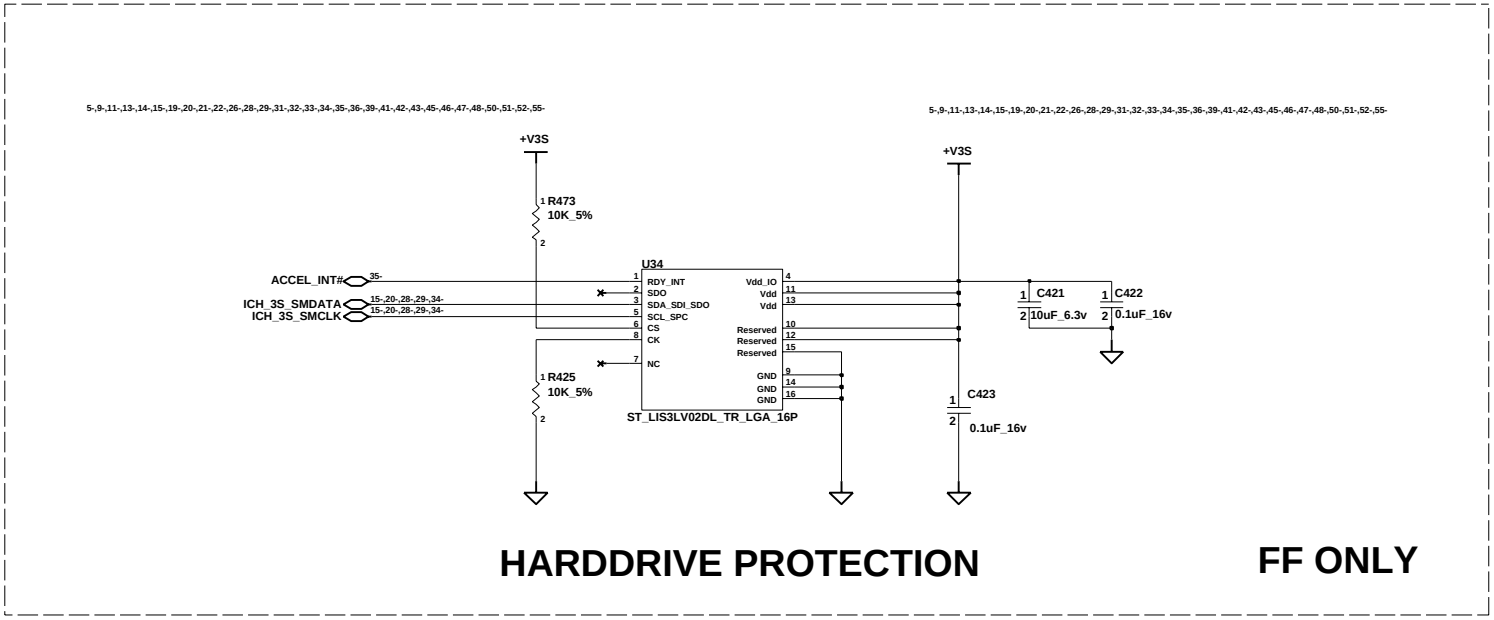

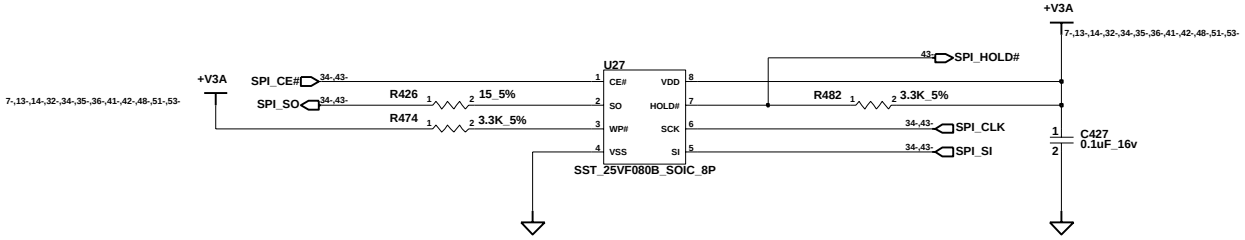

CHANGE by	Drawer_Name	4-Jan-2007	

INVENTEC

TITLE *Suzhou1.0*
SPI/HDD PROTECTION

SIZE	CODE	DOC. NUMBER	REV
A3	CS	Model_No	x01

SHEET 42 OF 56

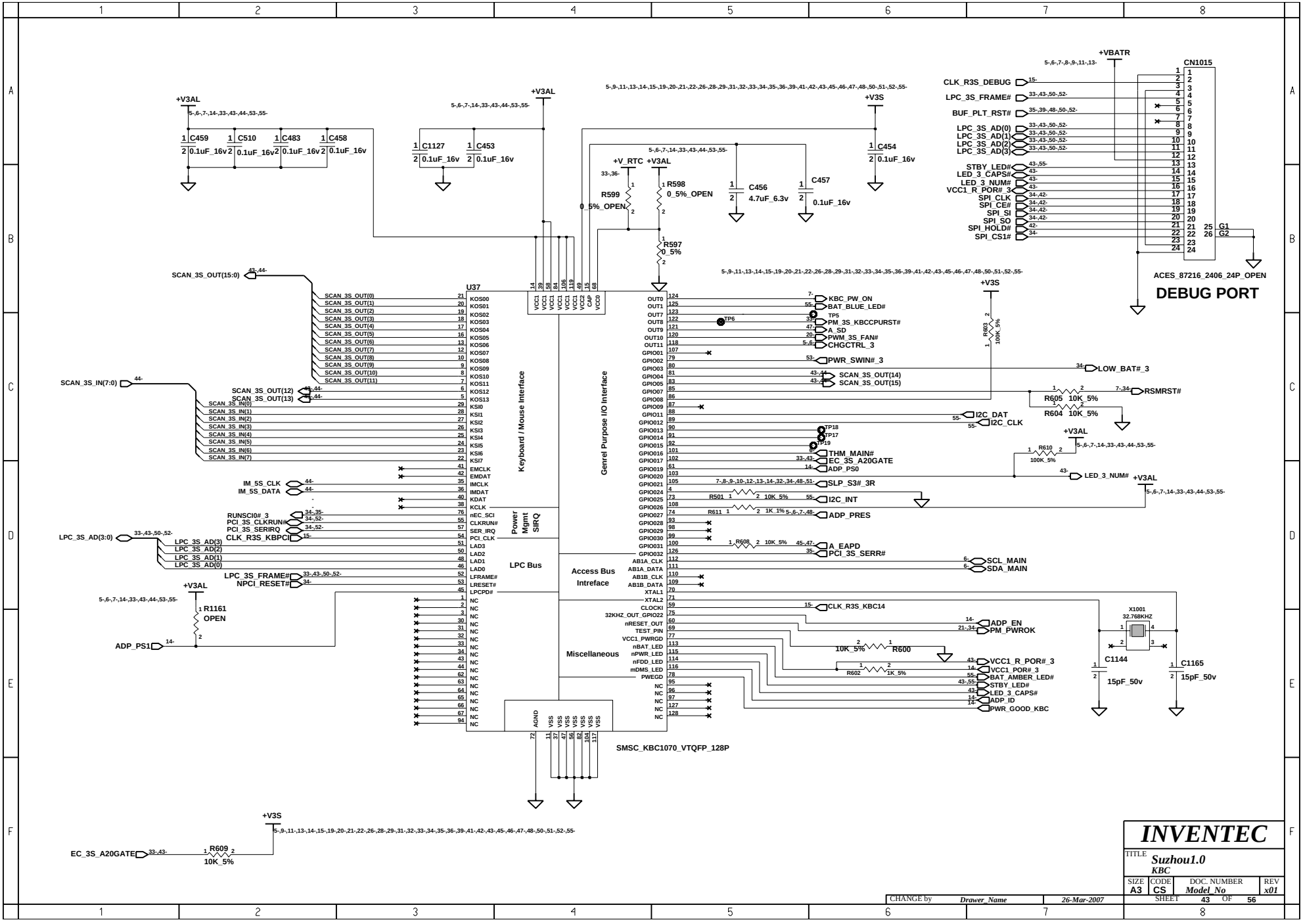
DEBUG PORT
CN1015
ACES_87216_2406_24P_OPEN
U37
SMSC_KBC1070_VTQFP_128P
Keyboard / Mouse Interface
Genrel Purpose I/O Interface
Power Mgmt SIRQ
LPC Bus
Access Bus Intreface
Miscellaneous
X1001 32.768KHZ
C1144 15pF_50v
C1165 15pF_50v
R1161 OPEN
R609 10K_5%
R598 0_5%_OPEN
R599 0_5%_OPEN
R597 0_5%
R605 10K_5%
R604 10K_5%
R603 100K_5%
R610 100K_5%
R501 10K_5%
R611 1K_1%
R608 10K_5%
R600 10K_5%
R602 1K_5%
+V3AL
+V3S
+VBATR
+V_RTC
C459 0.1uF_16v
C510 0.1uF_16v
C483 0.1uF_16v
C458 0.1uF_16v
C1127 0.1uF_16v
C453 0.1uF_16v
C456 4.7uF_6.3v
C457 0.1uF_16v
C454 0.1uF_16v
SCAN_3S_OUT(15:0)
SCAN_3S_IN(7:0)
LPC_3S_AD(3:0)
IM_5S_CLK
IM_5S_DATA
RUNSCI0#_3
PCI_3S_CLKRUN#
PCI_3S_SERIRQ
CLK_R3S_KBPCI
LPC_3S_FRAME#
NPCI_RESET#
ADP_PS1
EC_3S_A20GATE
CLK_R3S_DEBUG
BUF_PLT_RST#
STBY_LED#
LED_3_CAPS#
LED_3_NUM#
VCC1_R_POR#_3
SPI_CLK
SPI_CE#
SPI_SI
SPI_SO
SPI_HOLD#
SPI_CS1#
KBC_PW_ON
BAT_BLUE_LED#
PM_3S_KBCCPURST#
A_SD
PWM_3S_FAN#
CHGCTRL_3
PWR_SWIN#_3
LOW_BAT#_3
RSMRST#
I2C_DAT
I2C_CLK
THM_MAIN#
EC_3S_A20GATE
ADP_PS0
SLP_S3#_3R
I2C_INT
ADP_PRES
A_EAPD
PCI_3S_SERR#
SCL_MAIN
SDA_MAIN
CLK_R3S_KBC14
ADP_EN
PM_PWROK
VCC1_R_POR#_3
VCC1_POR#_3
BAT_AMBER_LED#
STBY_LED#
LED_3_CAPS#
ADP_ID
PWR_GOOD_KBC
INVENTEC
TITLE Suzhou1.0 KBC
SIZE A3
CODE CS
DOC. NUMBER Model_No
REV x01
SHEET 43 OF 56
CHANGE by Drawer_Name
26-Mar-2007

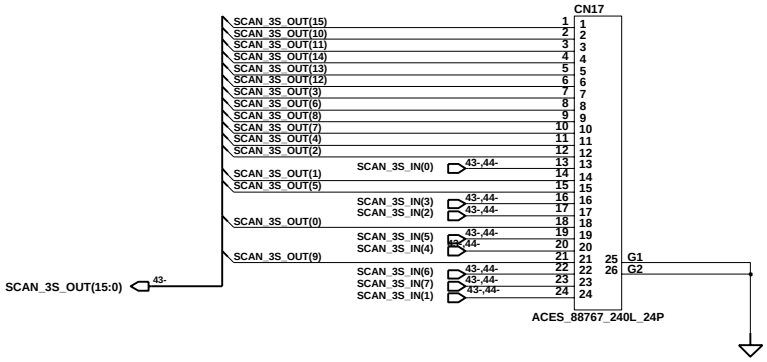

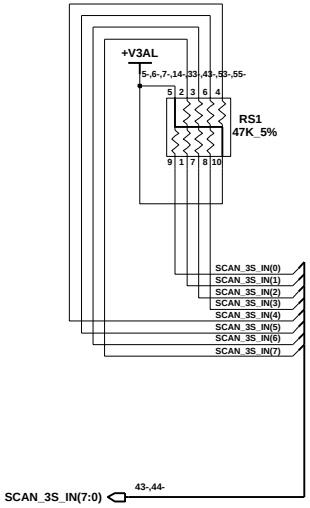

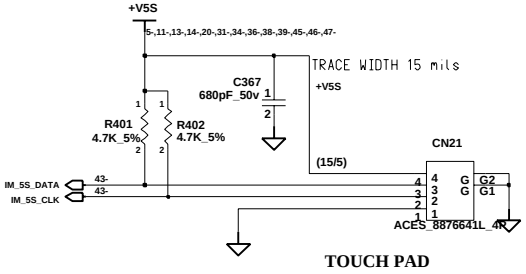

TOUCH PAD

CHANGE by	Drawer_Name	5-Feb-2007	

INVENTEC

TITLE *Suzhou1.0*
INT.KBC/POINT DEVICES

SIZE	CODE	DOC. NUMBER	REV
A3	CS	Model_No	x01

SHEET 44 OF 56

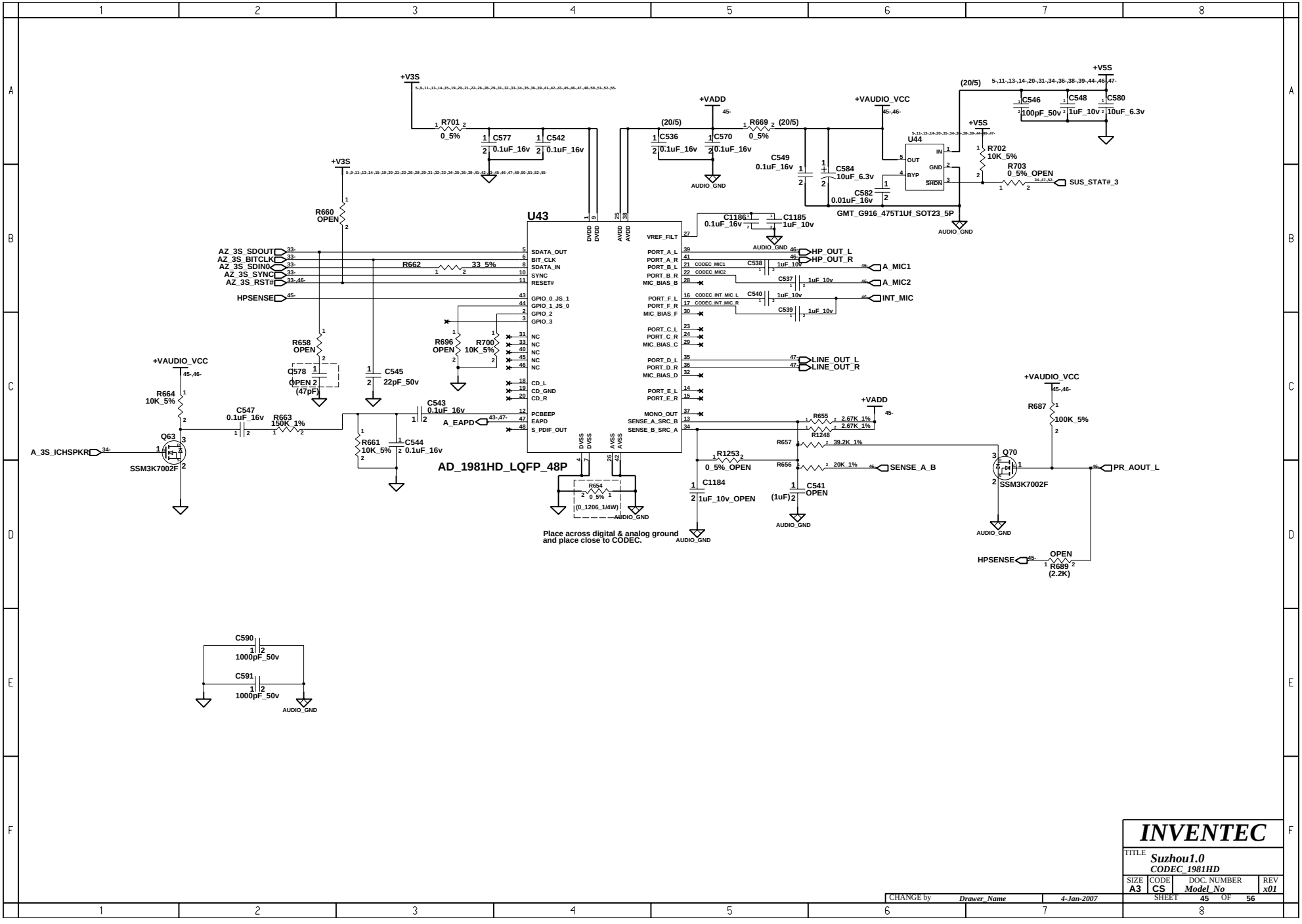

INVENTEC			
TITLE Suzhou1.0 CODEC_1981HD			
SIZE A3	CODE CS	DOC. NUMBER Model_No	REV x01
CHANGE by Drawer_Name	4-Jan-2007	SHEET 45 OF 56	

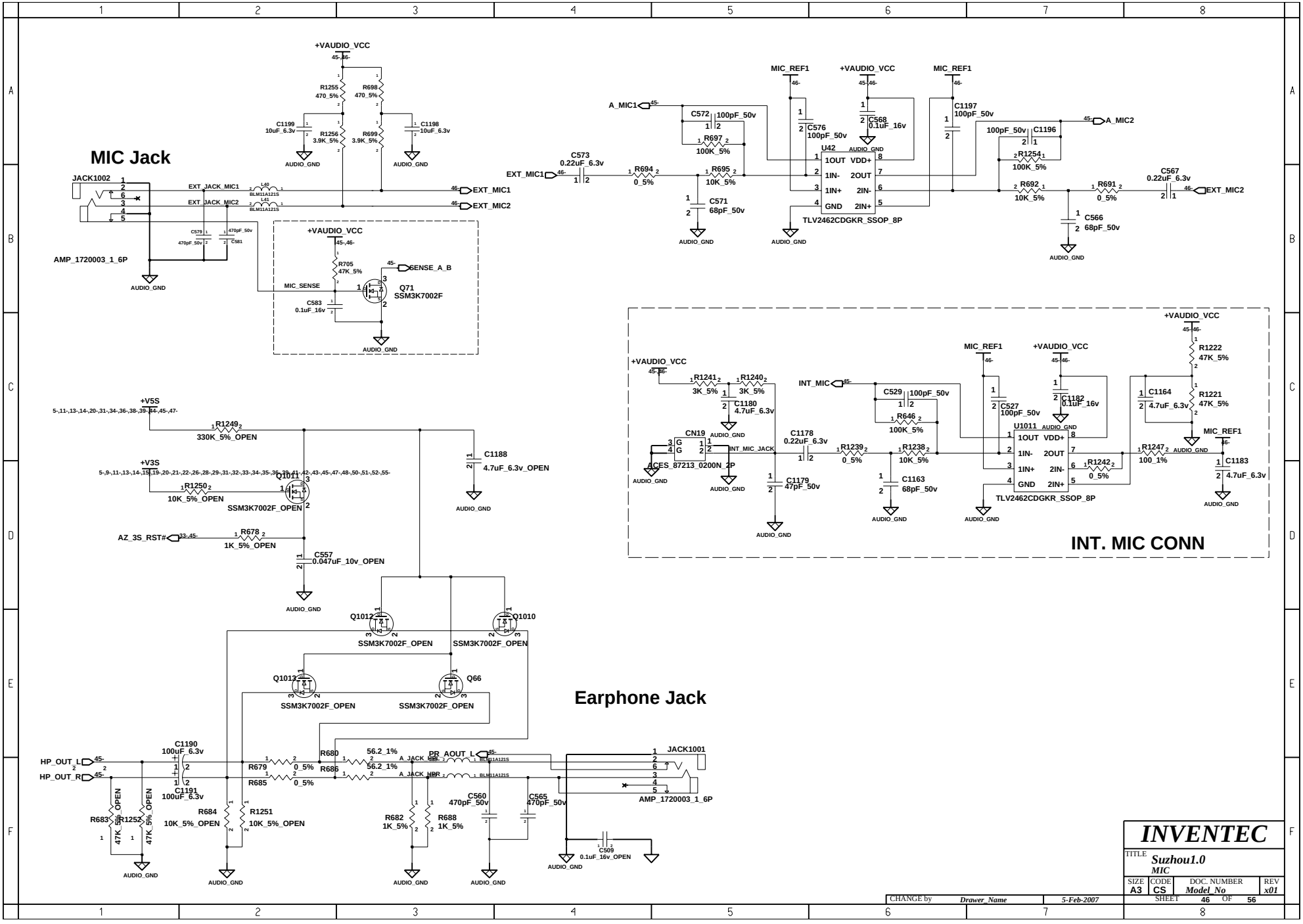
MIC Jack
JACK1002
AMP_1720003_1_6P
EXT_JACK_MIC1
EXT_JACK_MIC2
EXT_MIC1
EXT_MIC2
+VAUDIO_VCC
R1255 470_5%
R698 470_5%
R1256 3.9K_5%
R699 3.9K_5%
C1199 10uF_6.3v
C1198 10uF_6.3v
AUDIO_GND
MIC_SENSE
SENSE_A_B
R705 47K_5%
Q71 SSM3K7002F
C583 0.1uF_16v
A_MIC1
A_MIC2
C573 0.22uF_6.3v
R694 0_5%
R695 10K_5%
C572 100pF_50v
R697 100K_5%
C571 68pF_50v
MIC_REF1
C576 100pF_50v
C568 0.1uF_16v
U42
1OUT VDD+
1IN- 2OUT
1IN+ 2IN-
GND 2IN+
TLV2462CDGKR_SSOP_8P
C1197 100pF_50v
C1196 100pF_50v
R1254 100K_5%
R692 10K_5%
R691 0_5%
C566 68pF_50v
C567 0.22uF_6.3v
+V5S
330K_5_OPEN
+V3S
10K_5_OPEN
SSM3K7002F_OPEN
AZ_3S_RST#
1K_5_OPEN
C557 0.047uF_10v_OPEN
C1188 4.7uF_6.3v_OPEN
Q1012
Q1010
Q1013
Q66
Earphone Jack
HP_OUT_L
HP_OUT_R
C1190 100uF_6.3v
C1191 100uF_6.3v
R679 0_5%
R685 0_5%
R680 56.2_1%
R686 56.2_1%
PR_AOUT_L
PR_AOUT_R
A_JACK_HPL
A_JACK_HPR
JACK1001
AMP_1720003_1_6P
R683 47K_5%_OPEN
R1252 47K_5%_OPEN
R684 10K_5%_OPEN
R1251 10K_5%_OPEN
R682 1K_5%
R688 1K_5%
C560 470pF_50v
C565 470pF_50v
C509 0.1uF_16v_OPEN
INT_MIC
R1241 3K_5%
R1240 3K_5%
C1180 4.7uF_6.3v
CN19
ACES_87213_0200N_2P
INT_MIC_JACK
C1178 0.22uF_6.3v
C1179 47pF_50v
C529 100pF_50v
R646 100K_5%
R1239 0_5%
R1238 10K_5%
C1163 68pF_50v
C527 100pF_50v
C1182 0.1uF_16v
U1011
R1222 47K_5%
R1221 47K_5%
C1164 4.7uF_6.3v
R1247 100_1%
R1242 0_5%
C1183 4.7uF_6.3v
INT. MIC CONN
INVENTEC
TITLE Suzhou1.0
MIC
SIZE A3
CODE CS
DOC. NUMBER Model_No
REV x01
SHEET 46 OF 56
CHANGE by Drawer_Name
5-Feb-2007

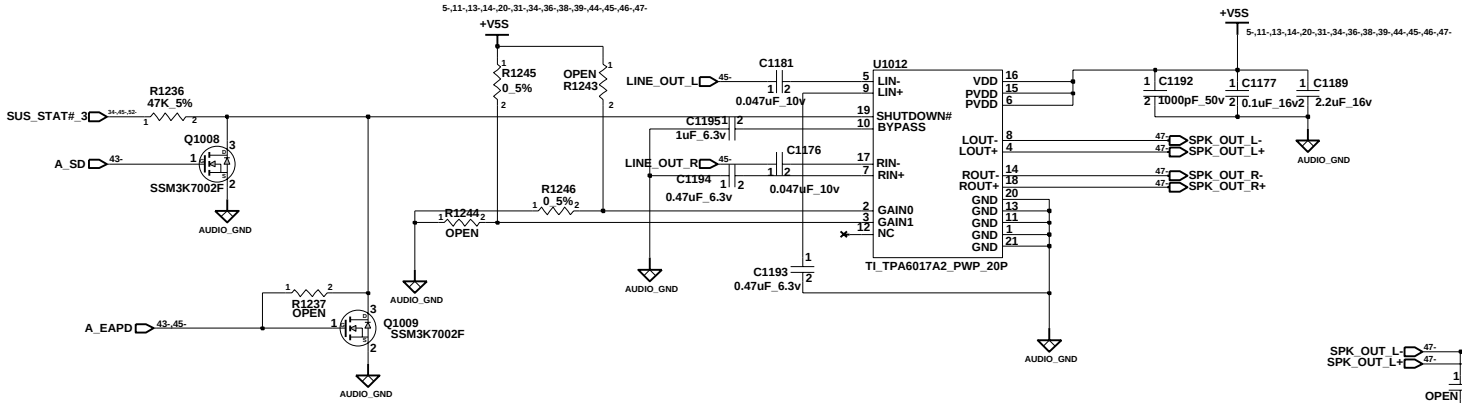

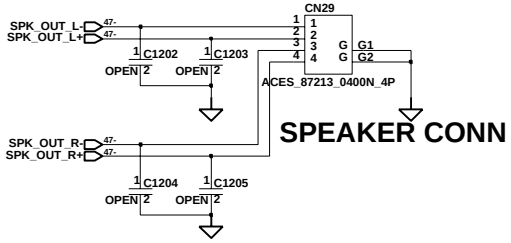

SPEAKER CONN

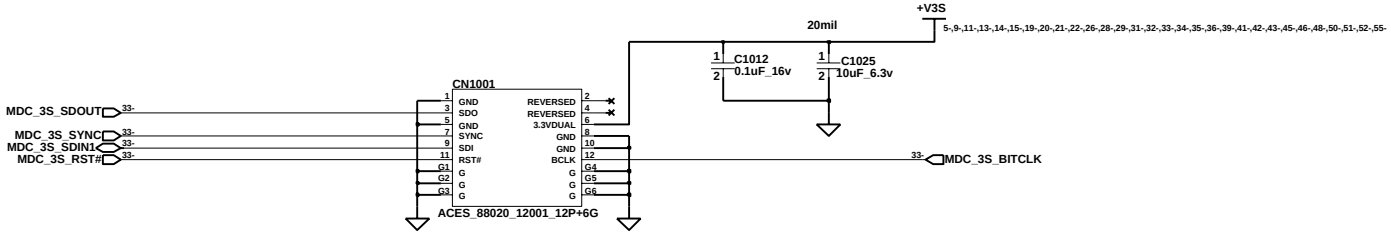

MDC CONN

INVENTEC			
TITLE *Suzhou1.0* *MDC*			
SIZE A3	CODE CS	DOC. NUMBER *Model_No*	REV *x01*
CHANGE by *Drawer_Name*	*4-Jan-2007*	SHEET 47 OF 56	

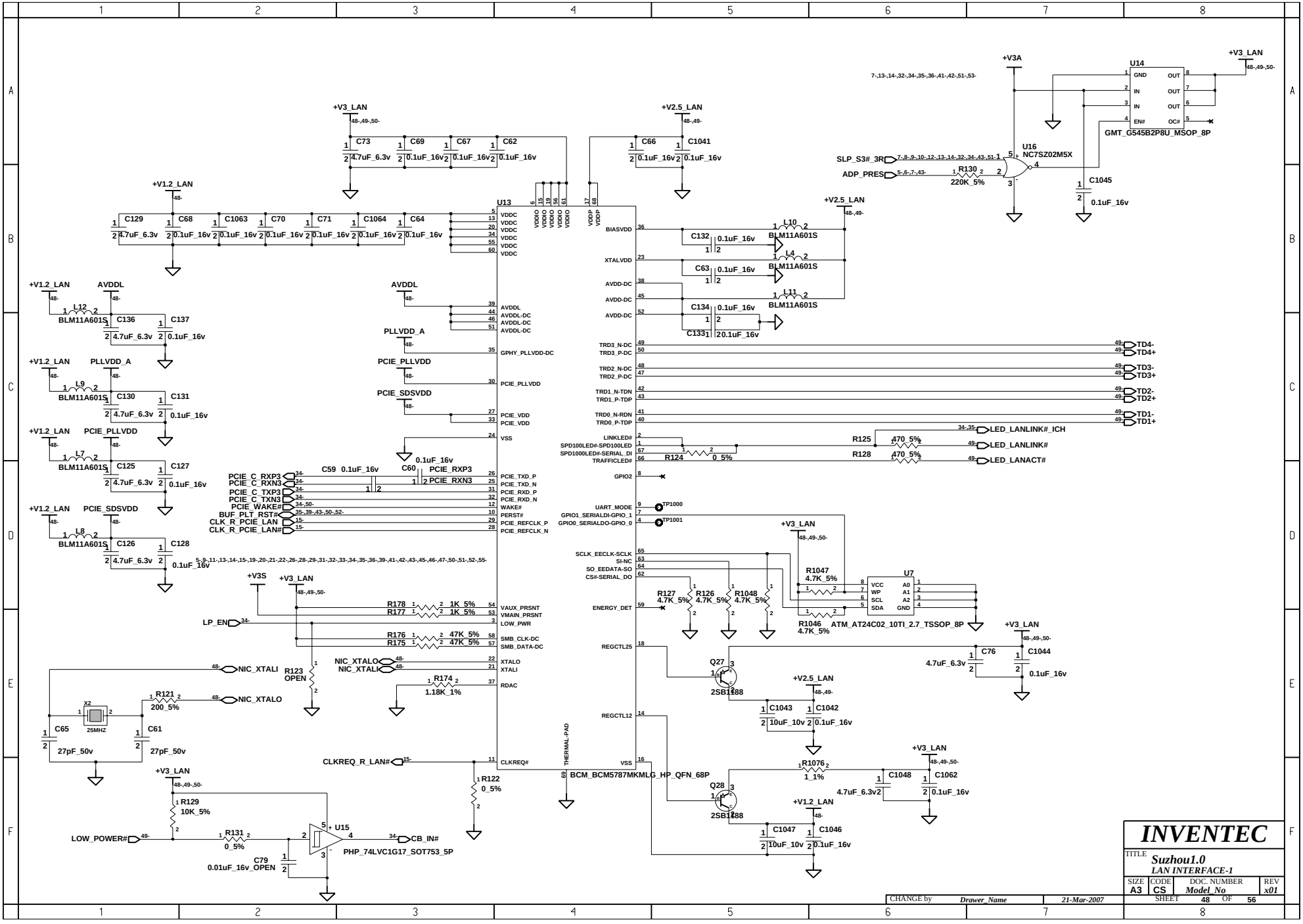
U13
BCM_BCM5787MKMLG_HP_QFN_68P
U14
GMT_G545B2P8U_MSOP_8P
U16
NC7SZ02M5X
U15
PHP_74LVC1G17_SOT753_5P
U7
ATM_AT24C02_10TI_2.7_TSSOP_8P
X2
25MHZ
Q27
2SB1288
Q28
2SB1288
+V3_LAN
+V2.5_LAN
+V1.2_LAN
+V3A
+V3S
AVDDL
PLLVDD_A
PCIE_PLLVDD
PCIE_SDSVDD
PCIE_C_RXP3
PCIE_C_RXN3
PCIE_C_TXP3
PCIE_C_TXN3
PCIE_WAKE#
BUF_PLT_RST#
CLK_R_PCIE_LAN
CLK_R_PCIE_LAN#
PCIE_RXP3
PCIE_RXN3
LP_EN
NIC_XTALO
NIC_XTALI
CLKREQ_R_LAN#
LOW_POWER#
CB_IN#
SLP_S3#_3R
ADP_PRES
LED_LANLINK#_ICH
LED_LANLINK#
LED_LANACT#
TD4-
TD4+
TD3-
TD3+
TD2-
TD2+
TD1-
TD1+
INVENTEC
TITLE
Suzhou1.0
LAN INTERFACE-1
SIZE A3
CODE CS
DOC. NUMBER Model_No
REV x01
SHEET 48 OF 56
CHANGE by Drawer_Name
21-Mar-2007

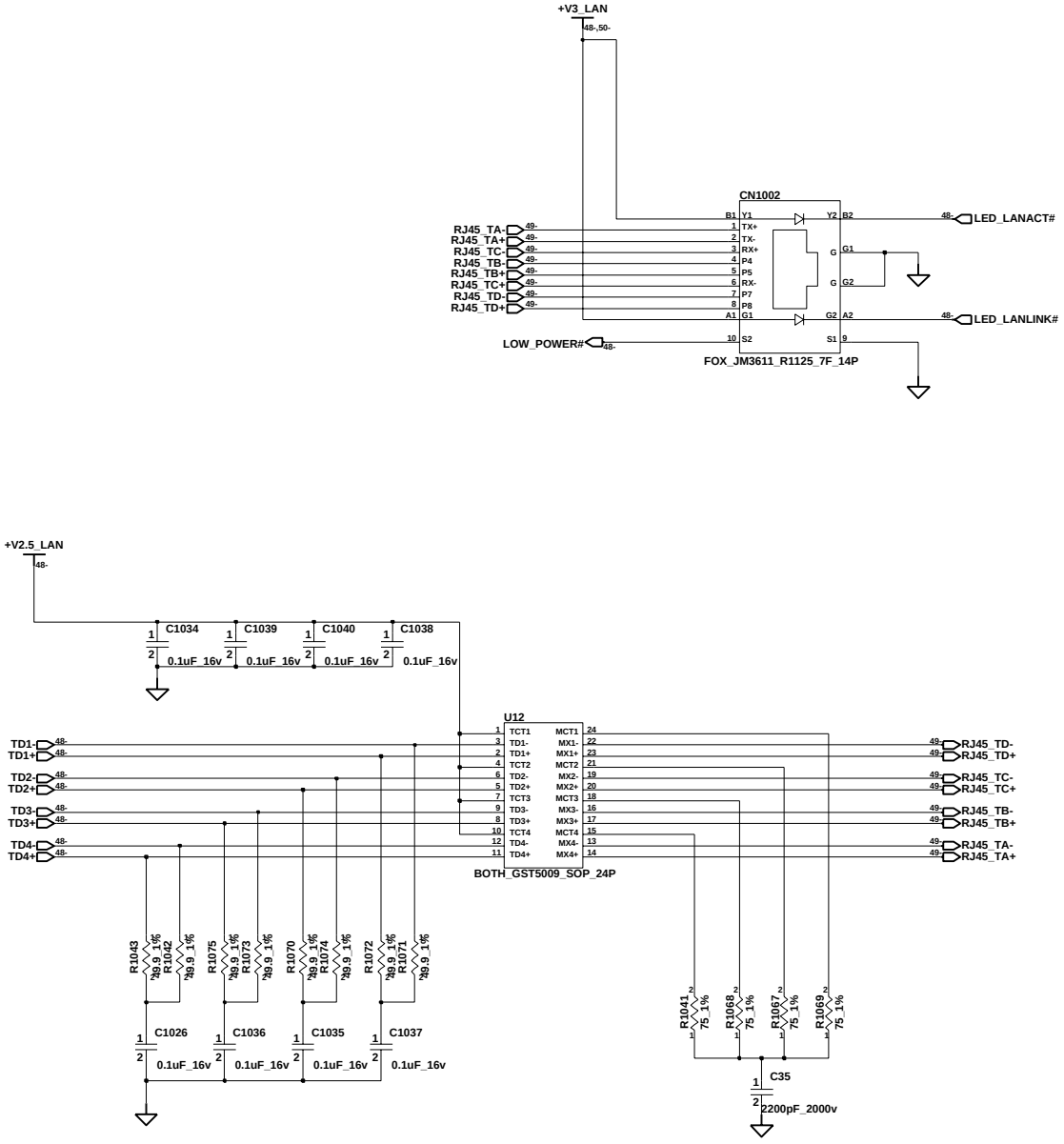

CHANGE by	Drawer_Name	15-Mar-2007	

INVENTEC

TITLE: Suzhou1.0 LAN RJ45 CONN

SIZE	CODE	DOC. NUMBER	REV
A3	CS	Model_No	x01

SHEET 49 OF 56

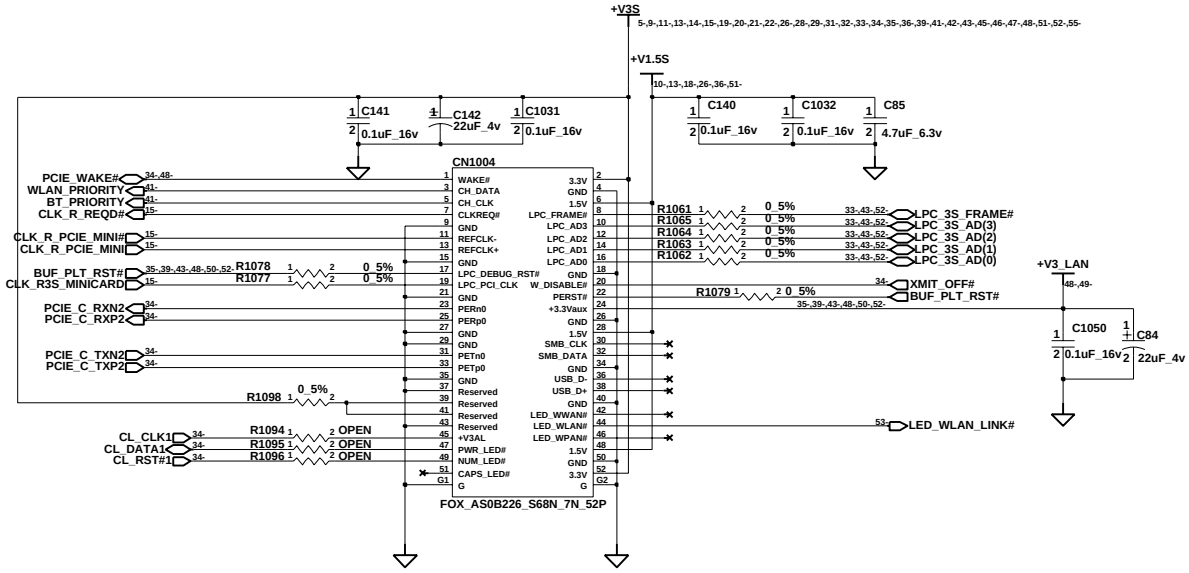

CHANGE by	Drawer_Name	7-Mar-2007	

INVENTEC

TITLE
Suzhou1.0
MINI CARD

SIZE	CODE	DOC. NUMBER	REV
A3	CS	Model_No	x01

SHEET 50 OF 56

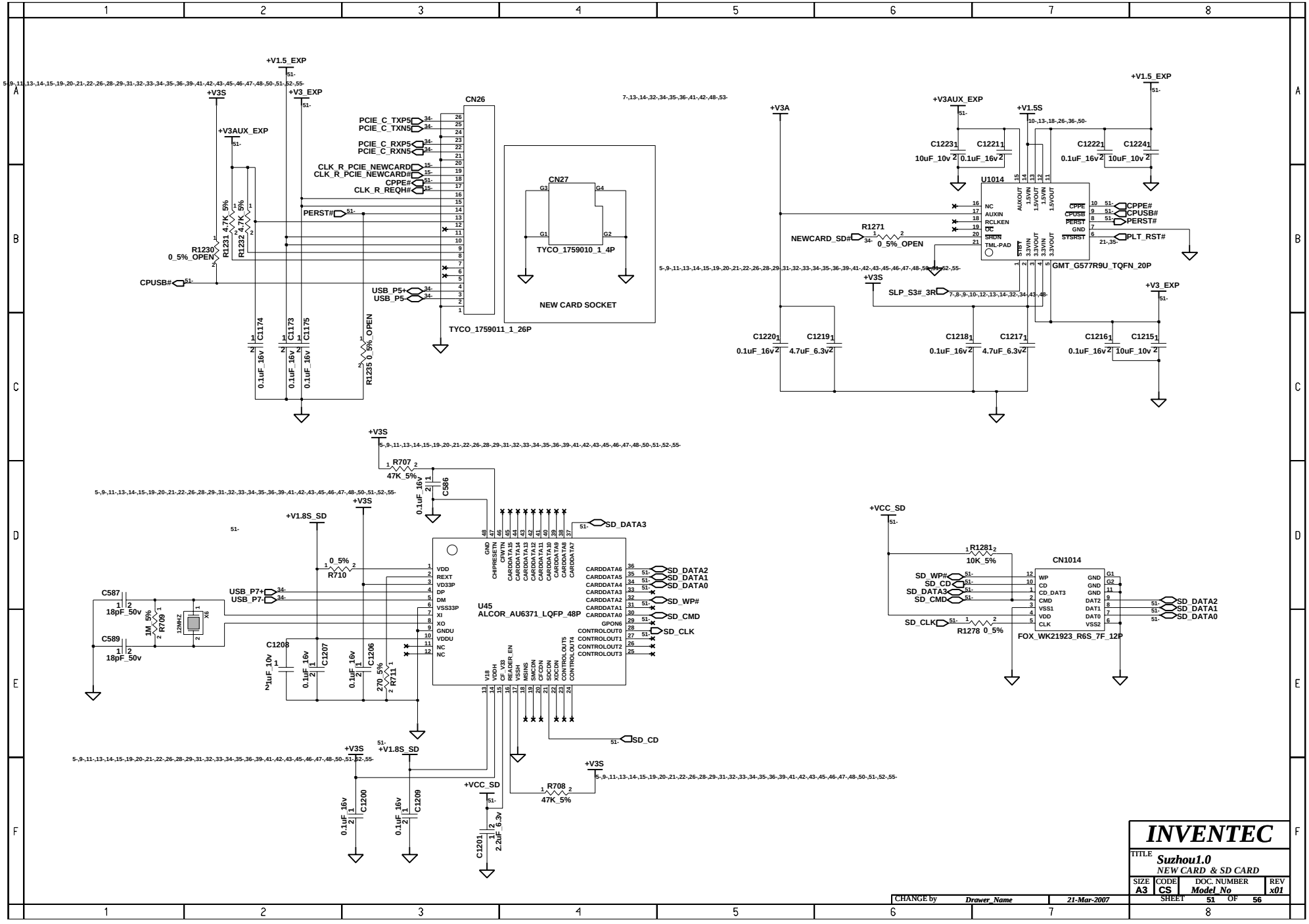
CN26
TYCO_1759011_1_26P
CN27
TYCO_1759010_1_4P
NEW CARD SOCKET
U1014
GMT_G577R9U_TQFN_20P
U45
ALCOR_AU6371_LQFP_48P
CN1014
FOX_WK21923_R6S_7F_12P
INVENTEC
Suzhou1.0
NEW CARD & SD CARD
SIZE A3
CODE CS
DOC. NUMBER Model_No
REV x01
CHANGE by Drawer_Name
21-Mar-2007
SHEET 51 OF 56

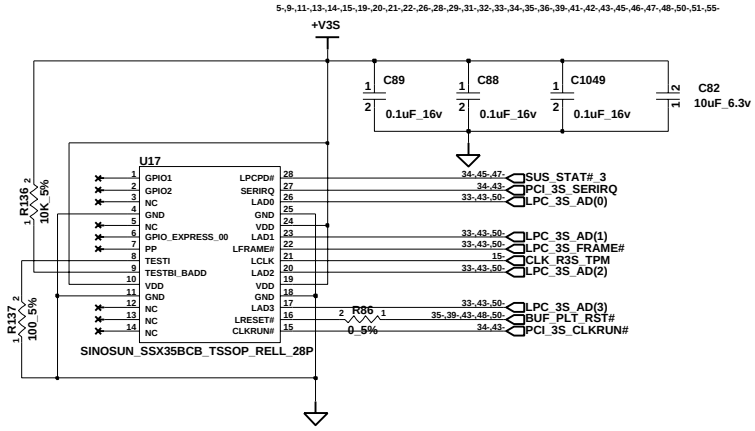

CHANGE by	Drawer_Name	25-Jan-2007	

INVENTEC

TITLE *Suzhou1.0*
TPM

SIZE	CODE	DOC. NUMBER	REV
A3	CS	*Model_No*	*x01*

SHEET 52 OF 56

LID SWITCH

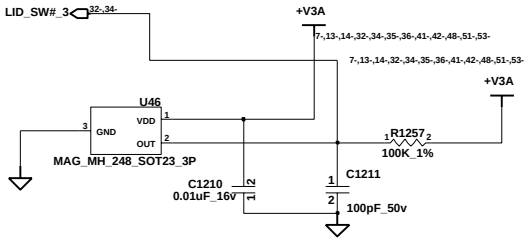

POWER SWITCH

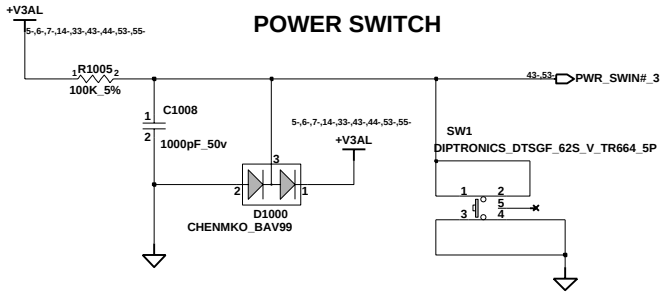

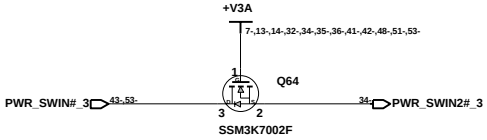

POWER / STANDBY LED

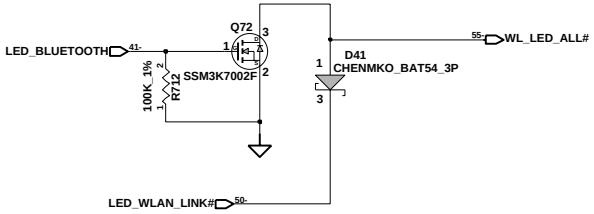

WLAN_Bluetooth LED

CHANGE by	Drawer_Name	15-Mar-2007	

INVENTEC

TITLE *Suzhou1.0*
BUTTON&SWITCH&LED

SIZE	CODE	DOC. NUMBER	REV
A3	CS	Model_No	x01

SHEET 53 OF 56

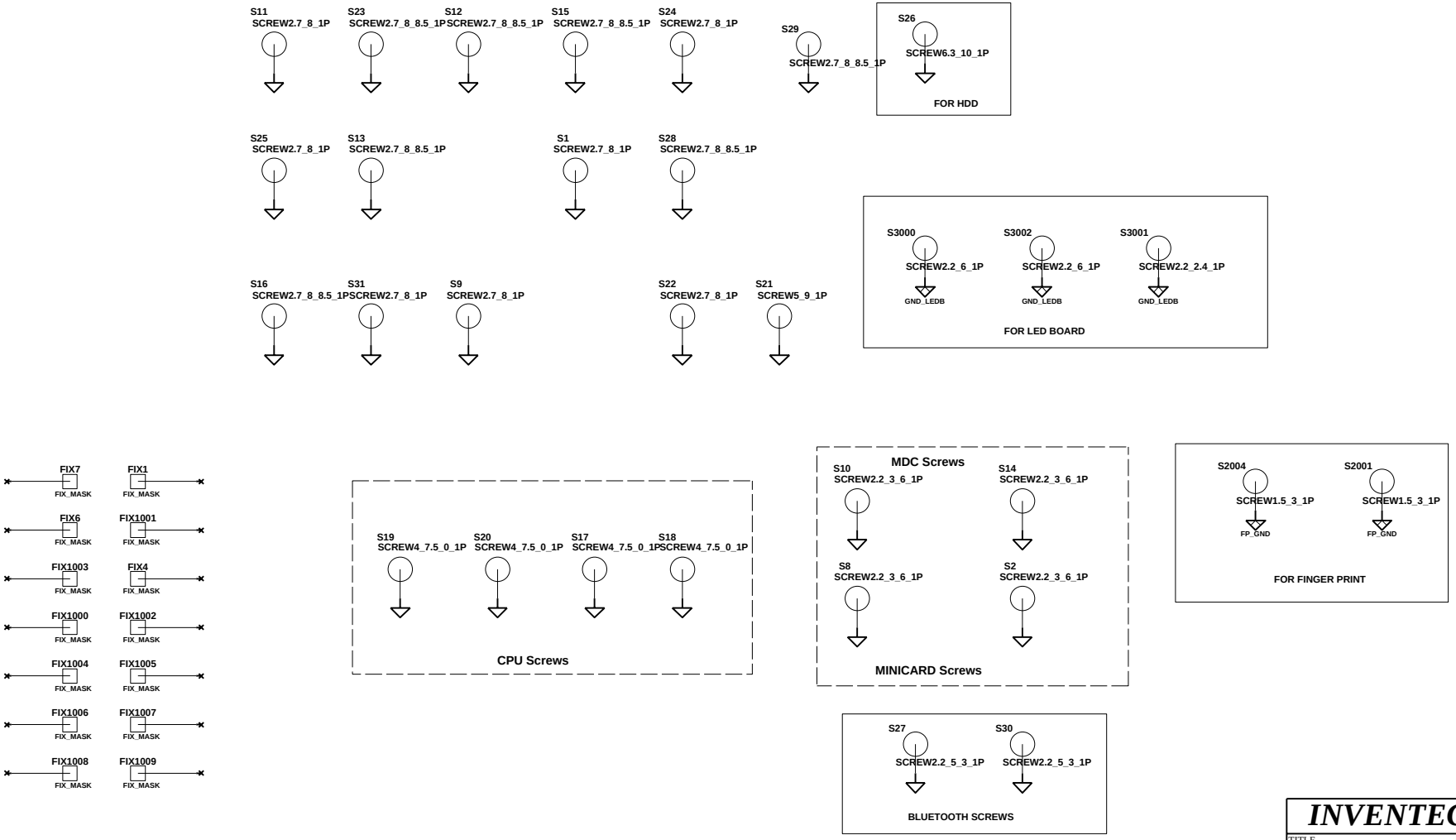

INVENTEC

TITLE *Suzhou1.0*
SCREW

SIZE	CODE	DOC. NUMBER	REV
A3	CS	*Model_No*	*x01*

CHANGE by *Drawer_Name* *21-Mar-2007*

SHEET 54 OF 56

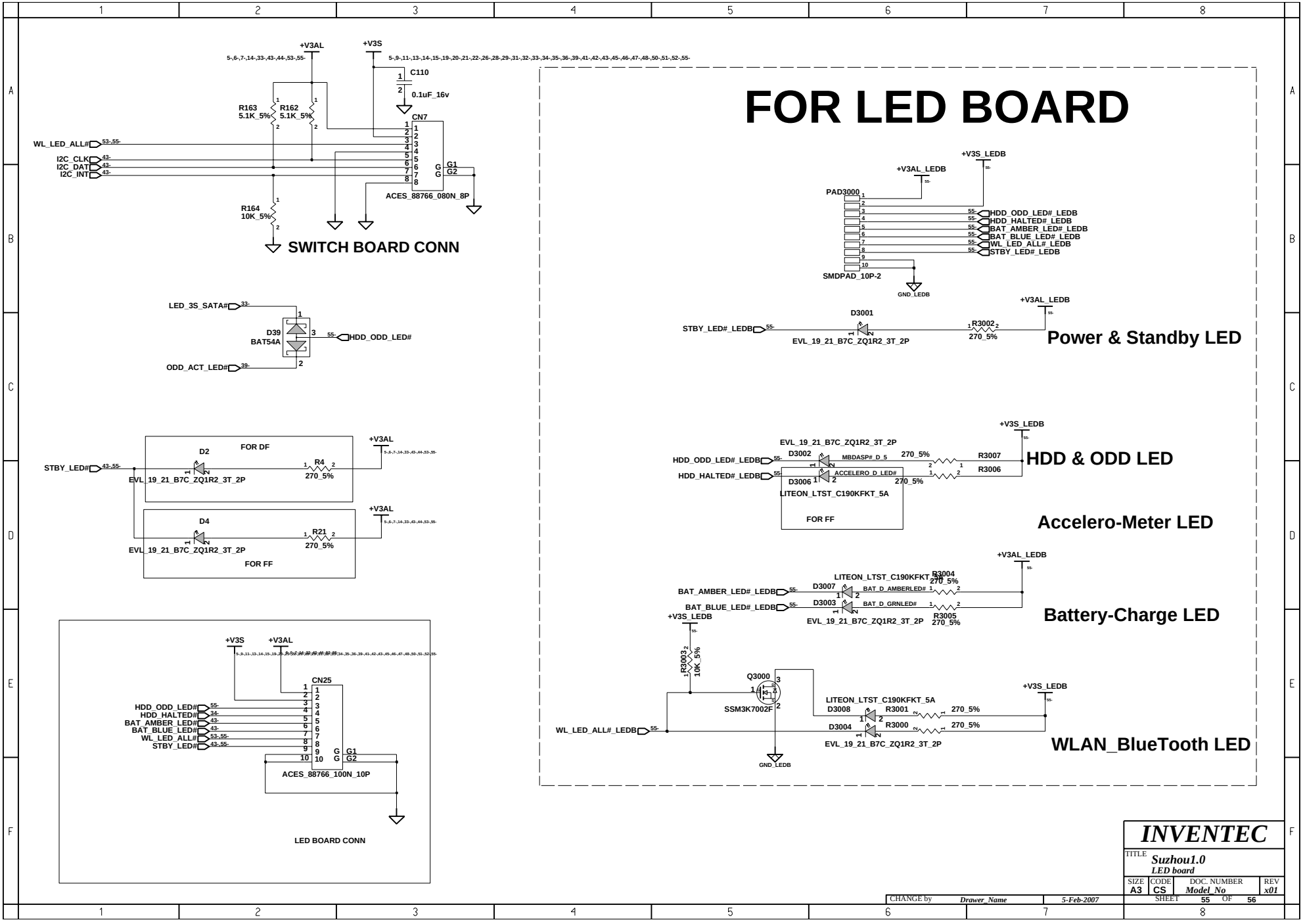
FOR LED BOARD
SWITCH BOARD CONN
+V3AL
+V3S
C110
0.1uF_16v
R163 5.1K_5%
R162 5.1K_5%
R164 10K_5%
CN7
ACES_88766_080N_8P
WL_LED_ALL#
I2C_CLK
I2C_DAT
I2C_INT
G1
G2
LED_3S_SATA#
D39 BAT54A
HDD_ODD_LED#
ODD_ACT_LED#
FOR DF
D2
R4 270_5%
STBY_LED#
EVL_19_21_B7C_ZQ1R2_3T_2P
FOR FF
D4
R21 270_5%
CN25
HDD_ODD_LED#
HDD_HALTED#
BAT_AMBER_LED#
BAT_BLUE_LED#
WL_LED_ALL#
STBY_LED#
ACES_88766_100N_10P
LED BOARD CONN
+V3S_LEDB
+V3AL_LEDB
PAD3000
HDD_ODD_LED# LEDB
HDD_HALTED# LEDB
BAT_AMBER_LED# LEDB
BAT_BLUE_LED# LEDB
WL_LED_ALL# LEDB
STBY_LED# LEDB
SMDPAD_10P-2
GND_LEDB
D3001
R3002 270_5%
Power & Standby LED
D3002
MBDASP#_D_5
R3007 270_5%
R3006 270_5%
ACCELERO_D_LED#
D3006
LITEON_LTST_C190KFKT_5A
HDD & ODD LED
Accelero-Meter LED
D3007
D3003
BAT_D_AMBERLED#
BAT_D_GRNLED#
R3004 270_5%
R3005 270_5%
Battery-Charge LED
R3003 10K_5%
Q3000
SSM3K7002F
D3008
D3004
R3001 270_5%
R3000 270_5%
WLAN_BlueTooth LED
INVENTEC
TITLE
Suzhou1.0
LED board
SIZE A3
CODE CS
DOC. NUMBER Model_No
REV x01
CHANGE by Drawer_Name
5-Feb-2007
SHEET 55 OF 56

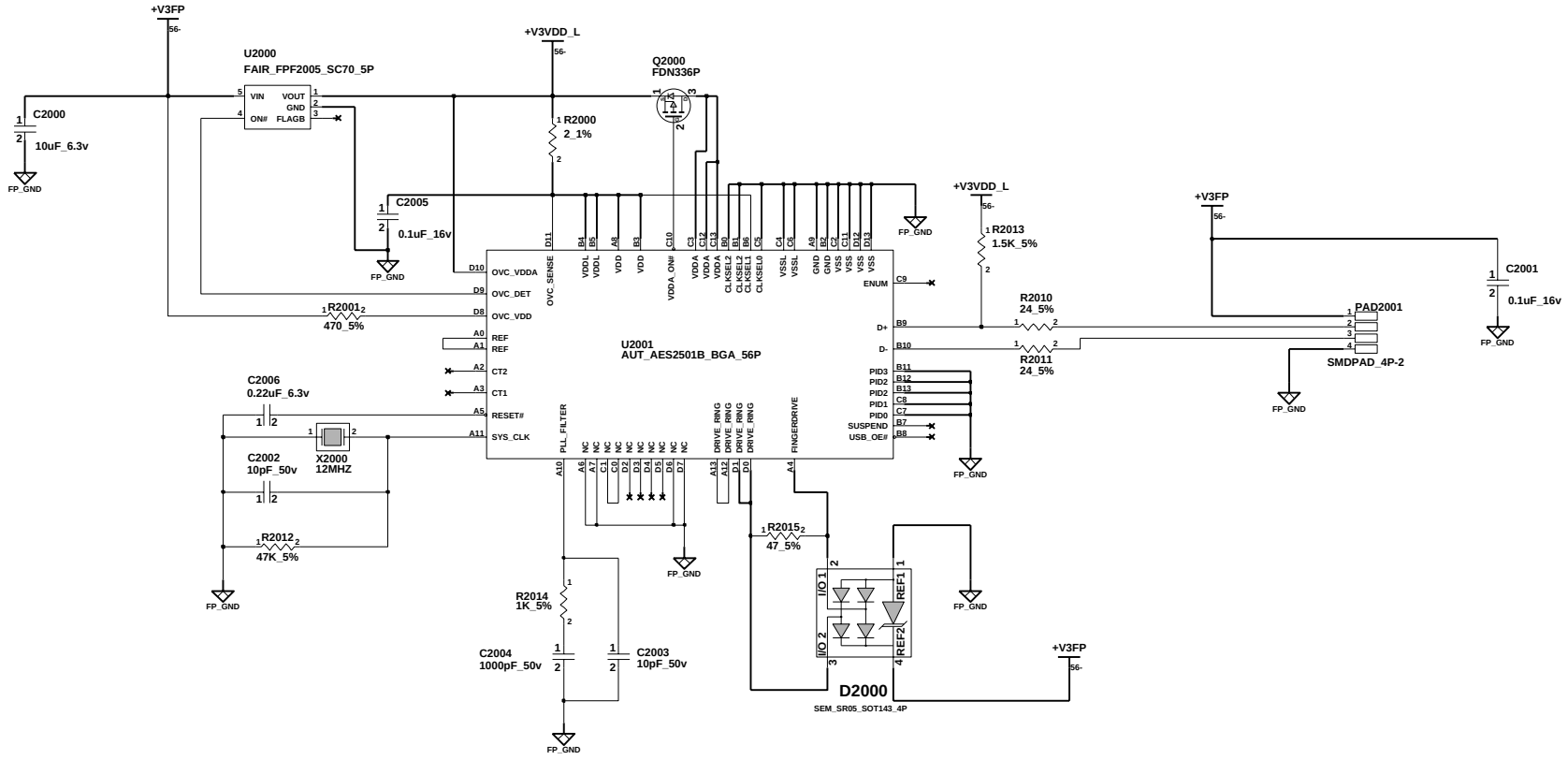

Finger Print Reader DB

CHANGE by	Drawer_Name	22-Mar-2007	

INVENTEC

TITLE *Suzhou1.0*
Finger Print board

SIZE	CODE	DOC. NUMBER	REV
A3	CS	*Model_No*	*x01*

SHEET 56 OF 56